2019 NINJA® ZX™-14R ABS

PARTS DIAGRAM

Rear Brake

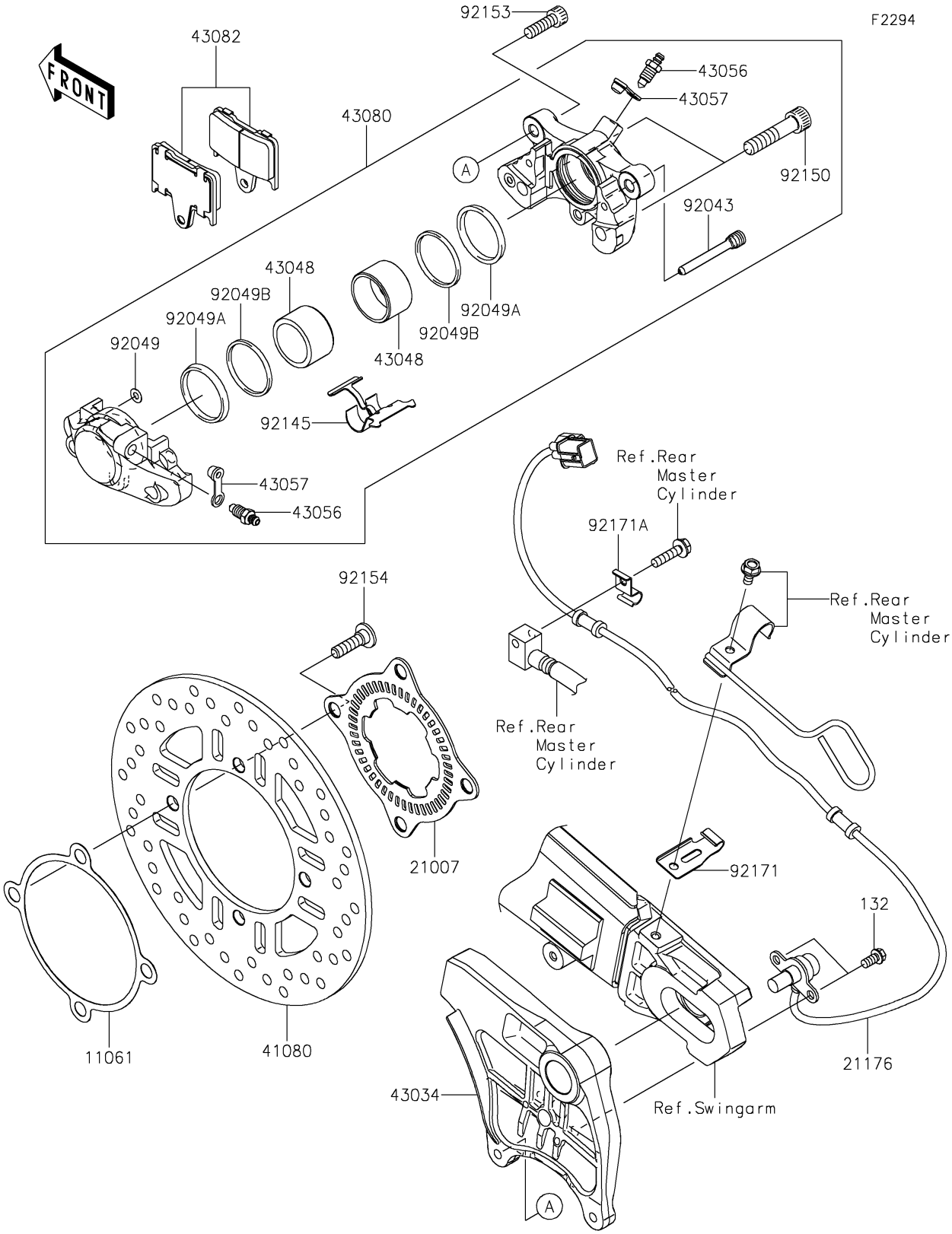

© 2026 Kawasaki Motors Corp., U.S.A.

2019 NINJA® ZX™-14R ABS

PARTS LIST

Rear Brake

ITEM NAME	PART NUMBER	QUANTITY
GASKET,DISC PLATE (Ref # 11061)	11061-0204	1
BOLT-FLANGED-SMALL,6X12 (Ref # 132)	132BA0612	2
ROTOR,SENSOR,RR (Ref # 21007)	21007-0141	1
SENSOR,SPEED,RR (Ref # 21176)	21176-0060	1
DISC,RR (Ref # 41080)	41080-0647	1
HOLDER-BRAKE,REAR CALIPER (Ref # 43034)	43034-0091	1
PISTON-CALIPER (Ref # 43048)	43048-0017	2
BREATHER (Ref # 43056)	43056-1055	2
CAP-BREATHER (Ref # 43057)	43057-1001	2
CALIPER-SUB-ASSY,RR,BLACK (Ref # 43080)	43080-0088-DJ	1
PAD-ASSY-BRAKE (Ref # 43082)	43082-0055	1
PIN,PAD (Ref # 92043)	92043-0106	1
SEAL-OIL (Ref # 92049)	92049-1448	1
SEAL-OIL (Ref # 92049A)	92049-1449	2
SEAL-OIL (Ref # 92049B)	92049-1450	2
SPRING,PAD (Ref # 92145)	92145-0379	1
BOLT (Ref # 92150)	92150-1972	2
BOLT,SOCKET,8X25 (Ref # 92153)	92153-1625	2
BOLT,SOCKET,8X30 (Ref # 92154)	92154-1865	4
CLAMP (Ref # 92171)	92171-0619	1
CLAMP (Ref # 92171A)	92171-1702	1

© 2026 Kawasaki Motors Corp., U.S.A.