2018 VULCAN® 1700 VAQUERO® ABS

PARTS DIAGRAM

Meter(s)

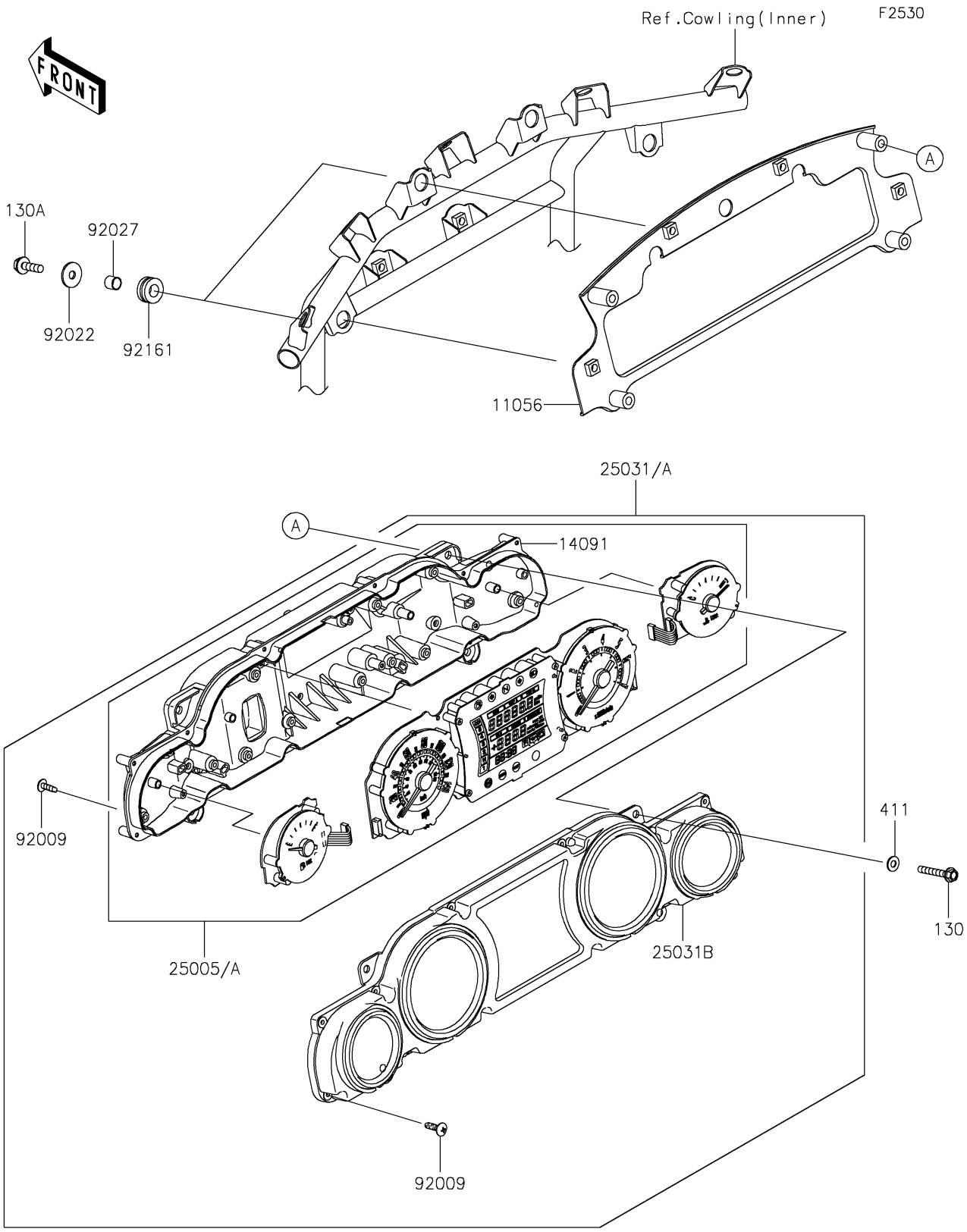

© 2026 Kawasaki Motors Corp., U.S.A.

2018 VULCAN® 1700 VAQUERO® ABS

Kawasaki
Let the Good Times Roll®

PARTS LIST

Meter(s)

ITEM NAME	PART NUMBER	QUANTITY
BRACKET,METER (Ref # 11056)	11056-1139	1
BOLT-FLANGED,5X35 (Ref # 130)	130BA0535	4
BOLT-FLANGED,6X20 (Ref # 130A)	130BA0620	4
COVER,METER,LWR (Ref # 14091)	14091-1577	1
SPEEDOMETER,COMBINATION,ABS (Ref # 25005)	25005-0129	1
SPEEDOMETER,COMBINATION,ABS (Ref # 25005A)	25005-0130	1
METER-ASSY,COMBINATION,ABS (Ref # 25031)	25031-0701	1
METER-ASSY,COMBINATION,ABS (Ref # 25031A)	25031-0702	1
METER-ASSY,UPP CASE (Ref # 25031B)	25031-5046	1
WASHER-PLAIN,5MM (Ref # 411)	411AB0500	4
SCREW,TAPPING,3X16 (Ref # 92009)	92009-1391	26
WASHER,6.5X20X1.6,BLACK (Ref # 92022)	92022-1346	4
COLLAR,6.8X10X8.5 (Ref # 92027)	92027-129	4
DAMPER (Ref # 92161)	92161-0154	4

© 2026 Kawasaki Motors Corp., U.S.A.