2016 VULCAN® 1700 VAQUERO® ABS

PARTS DIAGRAM

Footrests

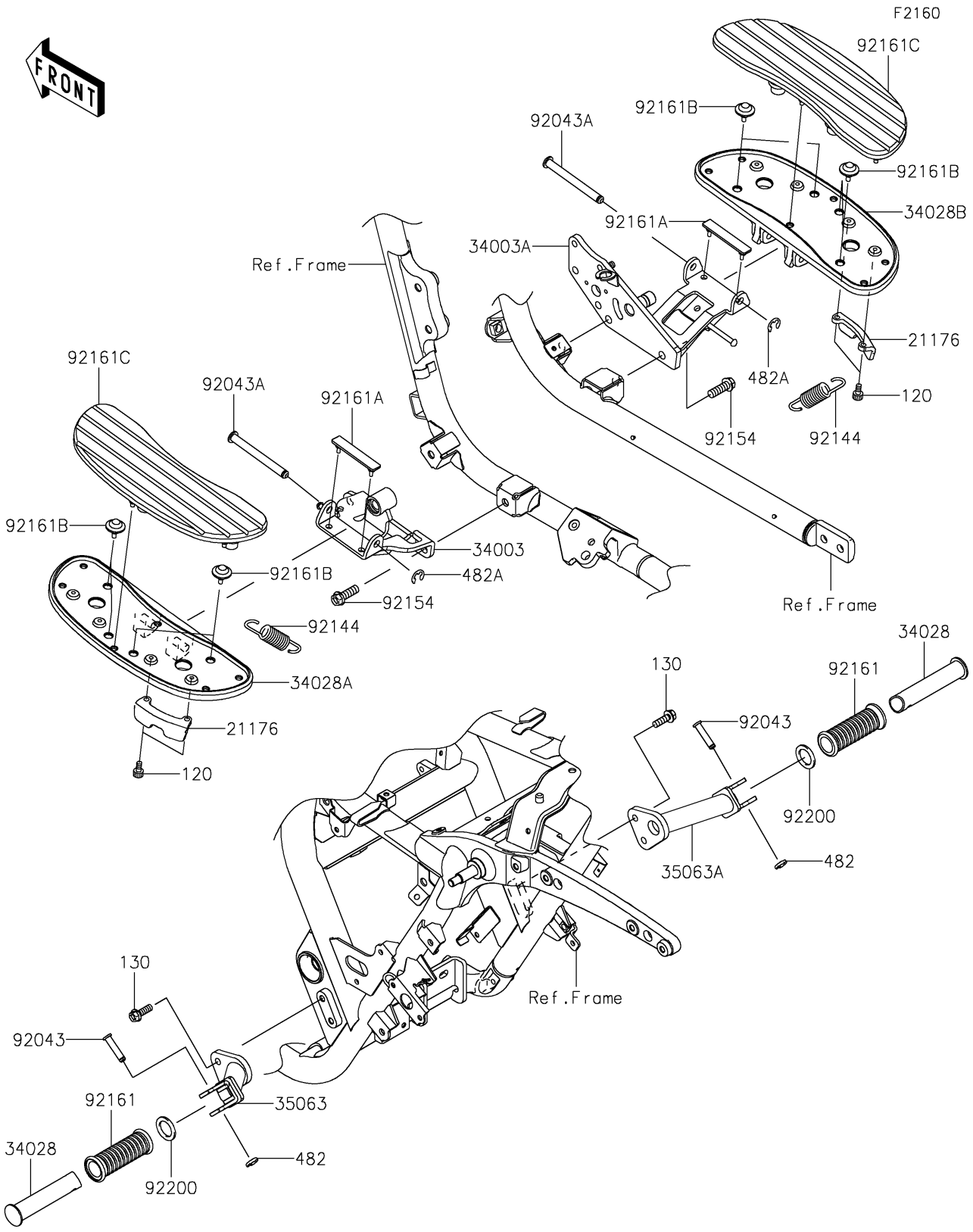

© 2026 Kawasaki Motors Corp., U.S.A.

2016 VULCAN® 1700 VAQUERO® ABS

PARTS LIST

Footrests

ITEM NAME	PART NUMBER	QUANTITY
BOLT-SOCKET,6X16 (Ref # 120)	120CB0616	4
BOLT-FLANGED,8X25 (Ref # 130)	130BB0825	4
SENSOR,BANK (Ref # 21176)	21176-0123	2
HOLDER-STEP,FR,LH,F.S.BLACK (Ref # 34003)	34003-0102-18R	1
HOLDER-STEP,FR,RH,F.S.BLACK (Ref # 34003A)	34003-0103-18R	1
STEP,RR (Ref # 34028)	34028-0017	2
STEP,FR,LH (Ref # 34028A)	34028-0143	1
STEP,FR,RH (Ref # 34028B)	34028-0144	1
STAY,LH,F.S.BLACK (Ref # 35063)	35063-0724-18R	1
STAY,RH,F.S.BLACK (Ref # 35063A)	35063-0725-18R	1
CIRCLIP-TYPE-E (Ref # 482)	482EA7000	2
CIRCLIP-TYPE-E,8MM (Ref # 482A)	482EA8000	2
PIN,8X36.5 (Ref # 92043)	92043-1339	2
PIN,10X98.5 (Ref # 92043A)	92043-1707	2
SPRING (Ref # 92144)	92144-1266	2
BOLT,FLANGED,10X30 (Ref # 92154)	92154-0284	4
DAMPER,STEP (Ref # 92161)	92161-0232	2
DAMPER,STEP HOLDER (Ref # 92161A)	92161-0746	2
DAMPER,STEP (Ref # 92161B)	92161-0766	8
DAMPER,FOOT BOARD (Ref # 92161C)	92161-0770	2
WASHER,22.5X33X2.3 (Ref # 92200)	92200-1482	2

© 2026 Kawasaki Motors Corp., U.S.A.