2016 VULCAN® 1700 VAQUERO® ABS

PARTS DIAGRAM

Oil Pump

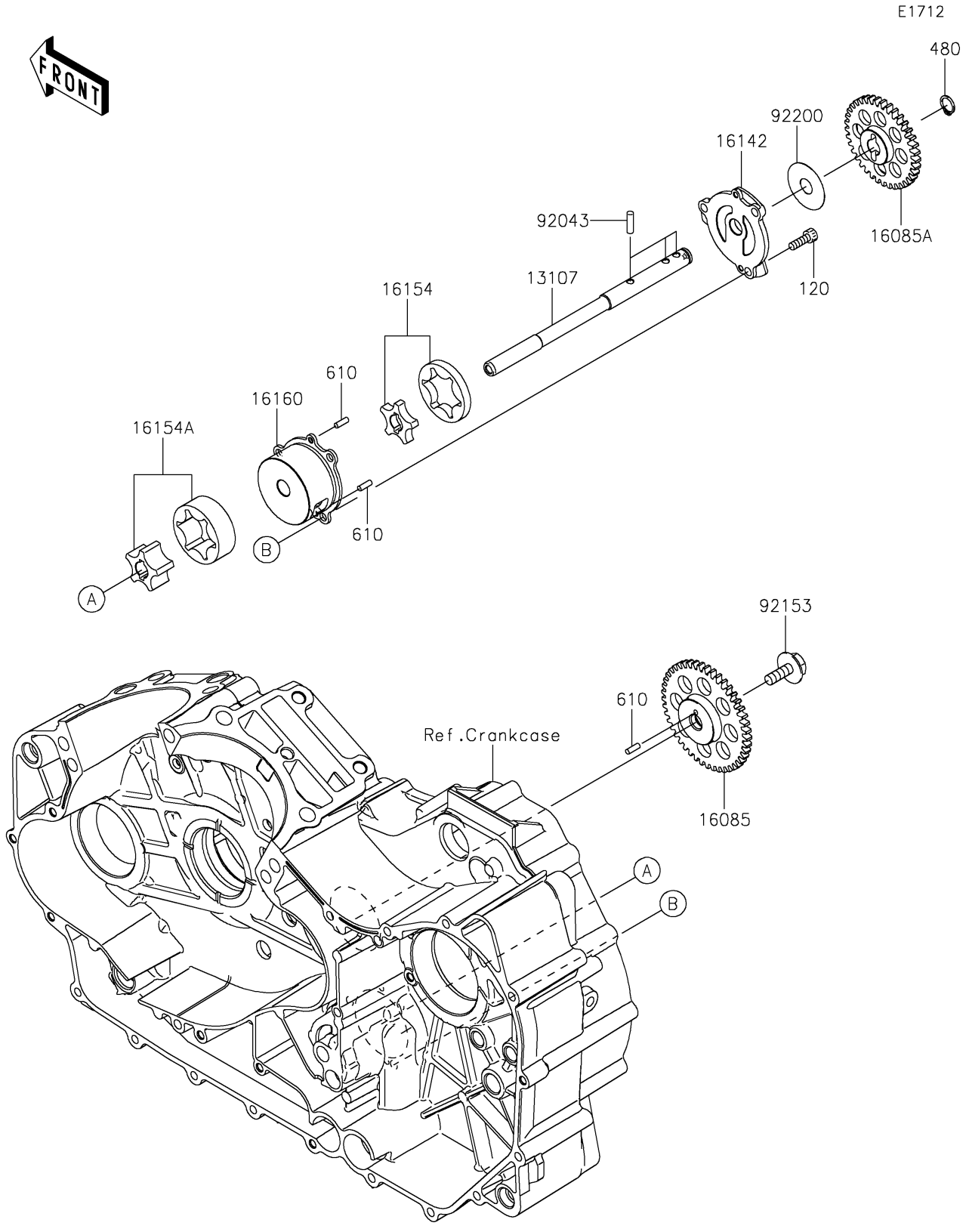

© 2026 Kawasaki Motors Corp., U.S.A.

2016 VULCAN® 1700 VAQUERO® ABS

PARTS LIST

Oil Pump

ITEM NAME	PART NUMBER	QUANTITY
BOLT-SOCKET,6X18 (Ref # 120)	120CA0618	3
SHAFT,OIL PUMP (Ref # 13107)	13107-0212	1
GEAR,DRIVE,45T (Ref # 16085)	16085-0119	1
GEAR,DRIVEN,37T (Ref # 16085A)	16085-0120	1
COVER-PUMP (Ref # 16142)	16142-0055	1
ROTOR-PUMP,FEED (Ref # 16154)	16154-0079	1
ROTOR-PUMP,SCAVENGE (Ref # 16154A)	16154-0085	1
BODY,OIL PUMP (Ref # 16160)	16160-0157	1
CIRCLIP-TYPE-C,13MM (Ref # 480)	480J1300	1
ROLLER,4X12 (Ref # 610)	610A0412	3
PIN,17.9X5.0 (Ref # 92043)	92043-1444	3
BOLT,FLANGED,8X23 (Ref # 92153)	92153-0549	1
WASHER,13.2X40X0.5 (Ref # 92200)	92200-0499	1

© 2026 Kawasaki Motors Corp., U.S.A.