2020 VULCAN® 1700 VAQUERO® ABS

PARTS DIAGRAM

Valve(s)

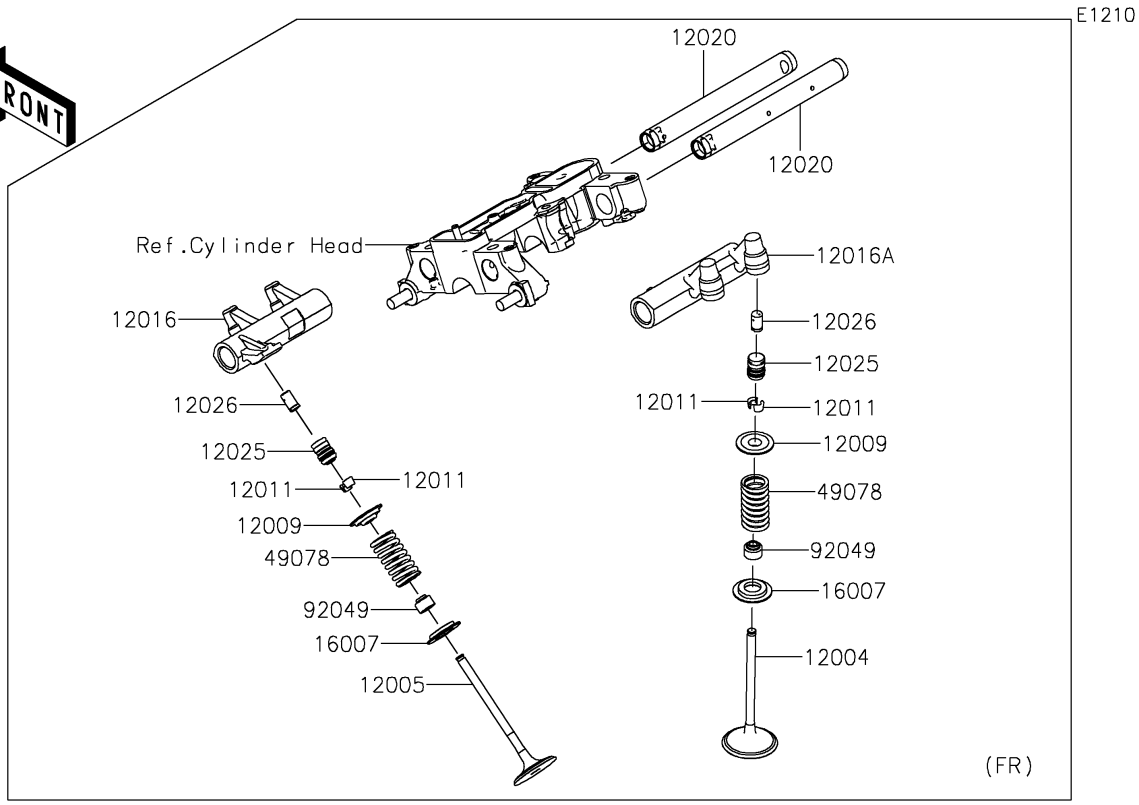

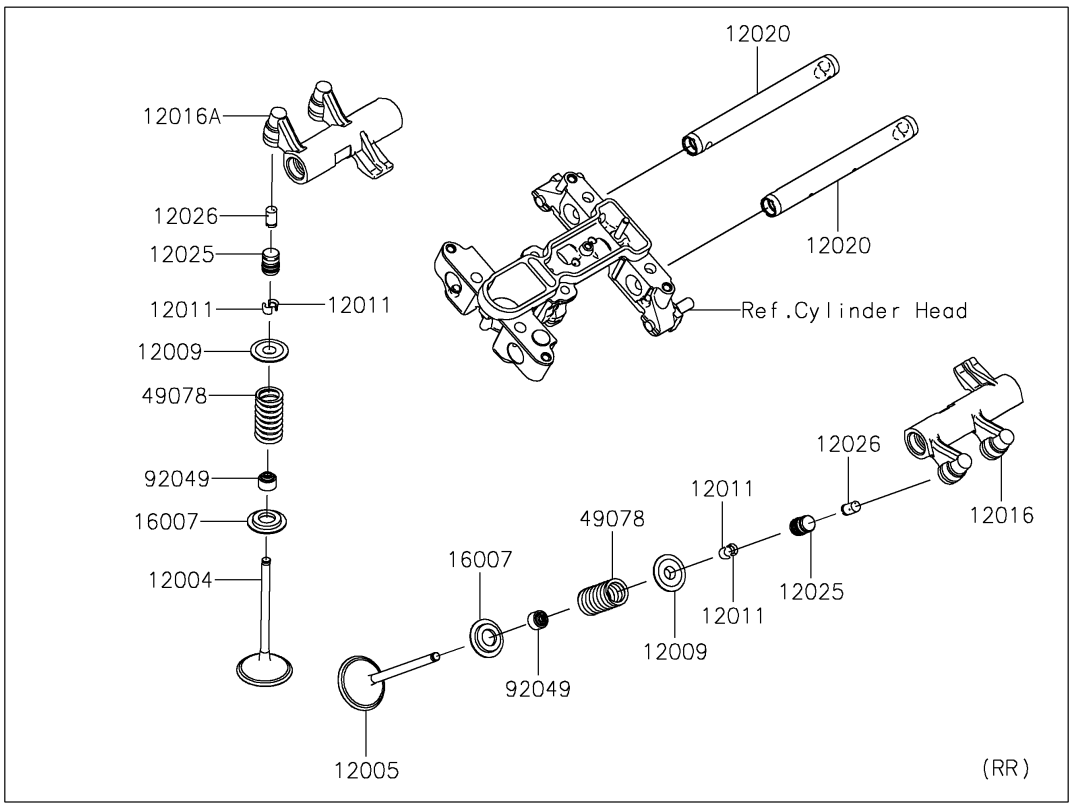

© 2026 Kawasaki Motors Corp., U.S.A.

2020 VULCAN® 1700 VAQUERO® ABS

PARTS LIST

Valve(s)

ITEM NAME	PART NUMBER	QUANTITY

© 2026 Kawasaki Motors Corp., U.S.A.