2021 JET SKI® ULTRA® 310LX

PARTS DIAGRAM

Cylinder Head

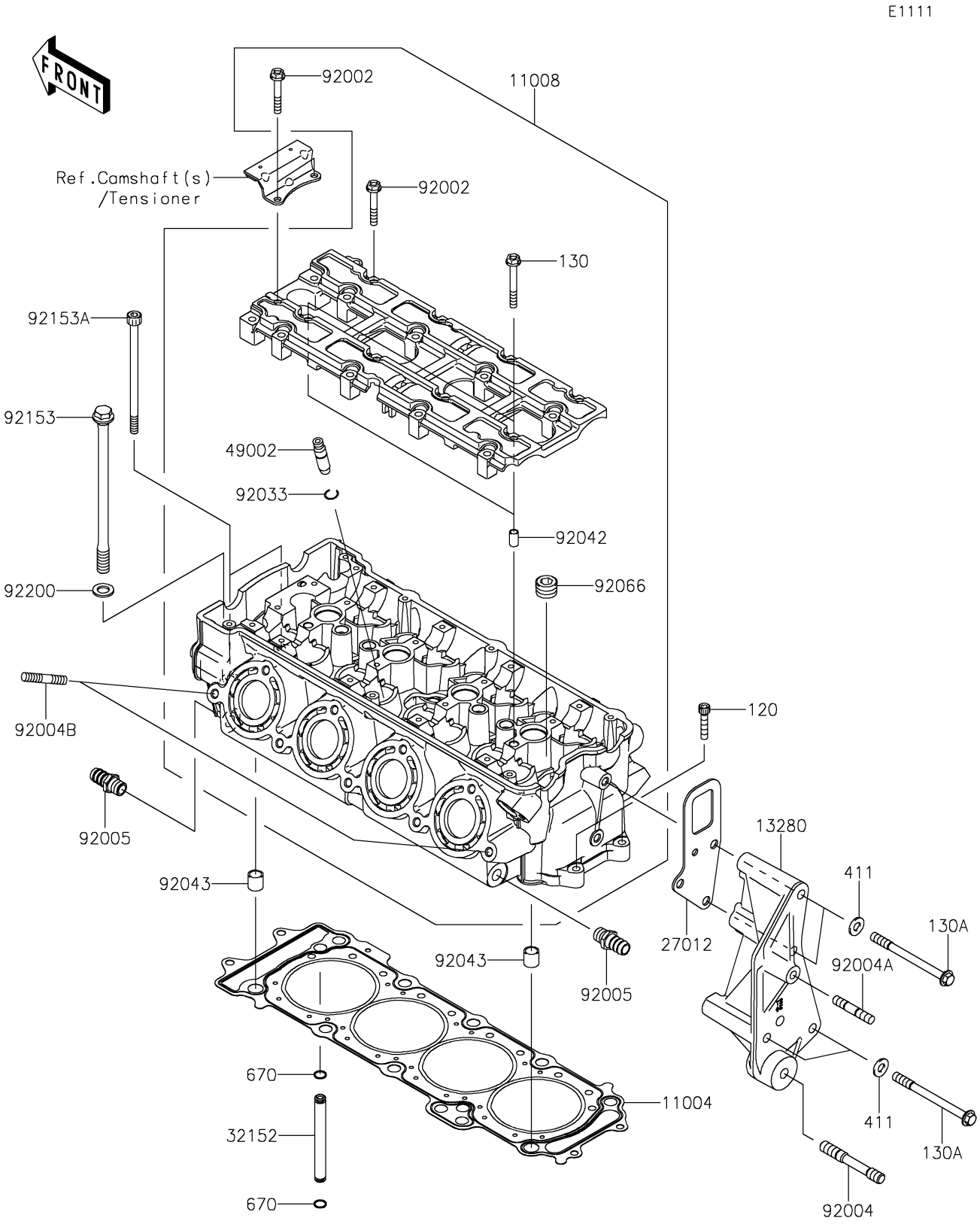

© 2026 Kawasaki Motors Corp., U.S.A.

2021 JET SKI® ULTRA® 310LX

PARTS LIST

Cylinder Head

ITEM NAME	PART NUMBER	QUANTITY
GASKET-HEAD (Ref # 11004)	11004-0744	1
HEAD-COMP-CYLINDER (Ref # 11008)	11008-3710	1
BOLT-SOCKET,6X30 (Ref # 120)	120CD0630	2
BOLT-FLANGED,6X50 (Ref # 130)	130CD0650	2
BOLT-FLANGED,8X95 (Ref # 130A)	130CD0895	4
HOLDER,BELT TENSIONER (Ref # 13280)	13280-3763	1
HOOK,ENGINE,RR (Ref # 27012)	27012-3863	1
PIPE,OIL (Ref # 32152)	32152-1544	1
WASHER-PLAIN,8MM (Ref # 411)	411S0800	4
GUIDE-VALVE (Ref # 49002)	49002-1140	16
O RING,7MM (Ref # 670)	670D1507	2
BOLT,6X40 (Ref # 92002)	92002-1756	18
STUD,10X55 (Ref # 92004)	92004-0023	1
STUD,8X33 (Ref # 92004A)	92004-1253	1
STUD,8X30 (Ref # 92004B)	92004-3743	2
FITTING (Ref # 92005)	92005-3714	2
RING-SNAP (Ref # 92033)	92033-1247	16
PIN,DOWEL,6.3X8X14 (Ref # 92042)	92042-007	2
PIN,14X14 (Ref # 92043)	92043-1593	2
PLUG,PT1/2X12.5 (Ref # 92066)	92066-0002	5
BOLT,FLANGED,11X174 (Ref # 92153)	92153-3730	10
BOLT,SOCKET,7X126 (Ref # 92153A)	92153-3731	2
WASHER,11.2X18.2X1.8 (Ref # 92200)	92200-0940	10

© 2026 Kawasaki Motors Corp., U.S.A.