2021 JET SKI® ULTRA® 310X

PARTS DIAGRAM

Drive Shaft

E3134

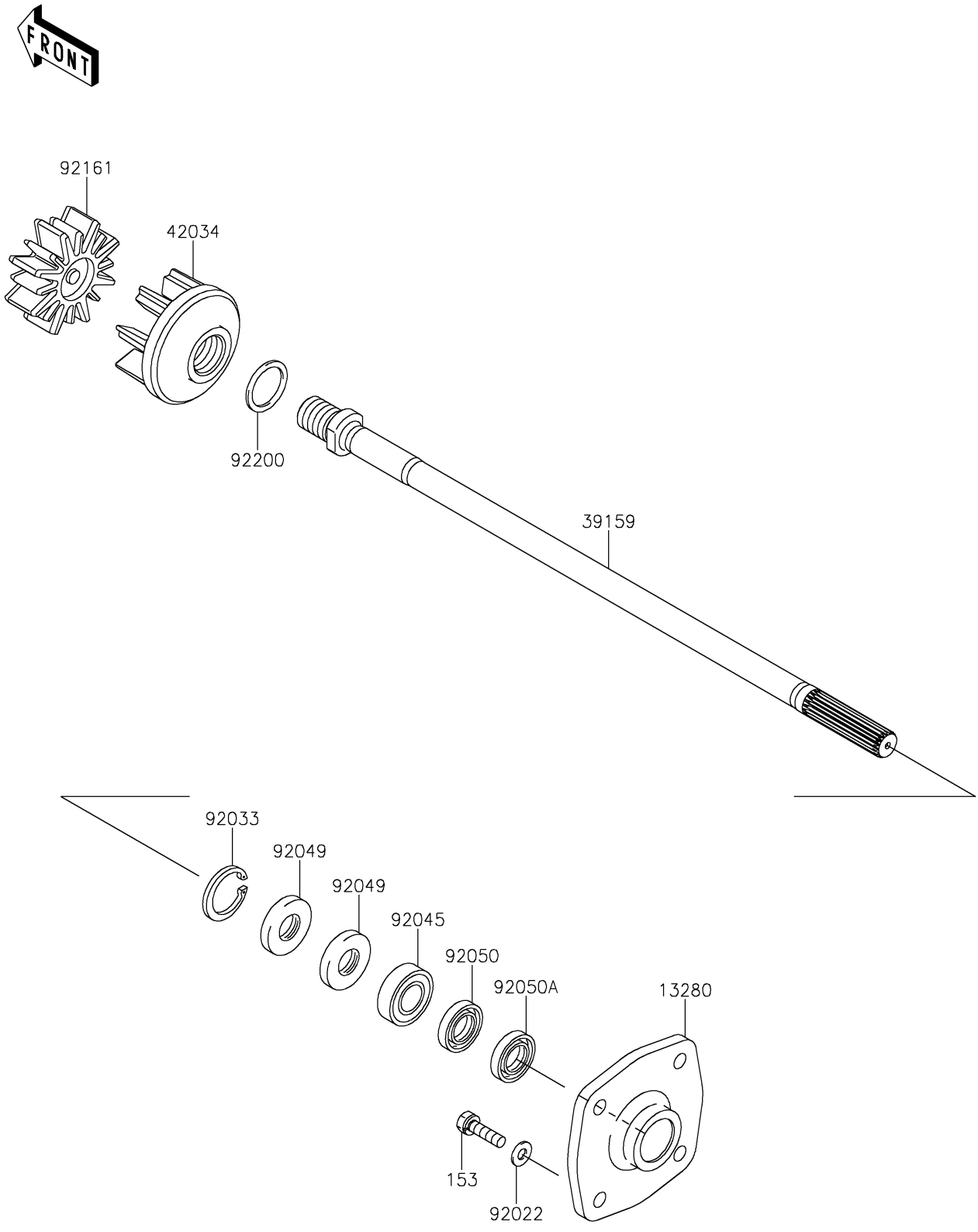

© 2026 Kawasaki Motors Corp., U.S.A.

2021 JET SKI® ULTRA® 310X

PARTS LIST

Drive Shaft

ITEM NAME	PART NUMBER	QUANTITY
HOLDER (Ref # 13280)	13280-3756	1
BOLT-WS-SMALL,8X30 (Ref # 153)	153R0830	4
SHAFT-DRIVE (Ref # 39159)	39159-0044	1
COUPLING (Ref # 42034)	42034-3720	1
WASHER,8.2X18X1.5 (Ref # 92022)	92022-1964	4
RING-SNAP,42MM (Ref # 92033)	92033-3713	1
BEARING-BALL,60042RD (Ref # 92045)	92045-3705	1
SEAL-OIL,S620426 (Ref # 92049)	92049-3707	2
SEAL-OIL,SCY20368 (Ref # 92050)	92050-502	1
SEAL-OIL,SC20367 (Ref # 92050A)	92050-503	1
DAMPER,COUPLING (Ref # 92161)	92161-3797	1
WASHER,30.5X38X2 (Ref # 92200)	92200-3809	1

© 2026 Kawasaki Motors Corp., U.S.A.