2021 JET SKI® ULTRA® 310X

PARTS DIAGRAM

Throttle

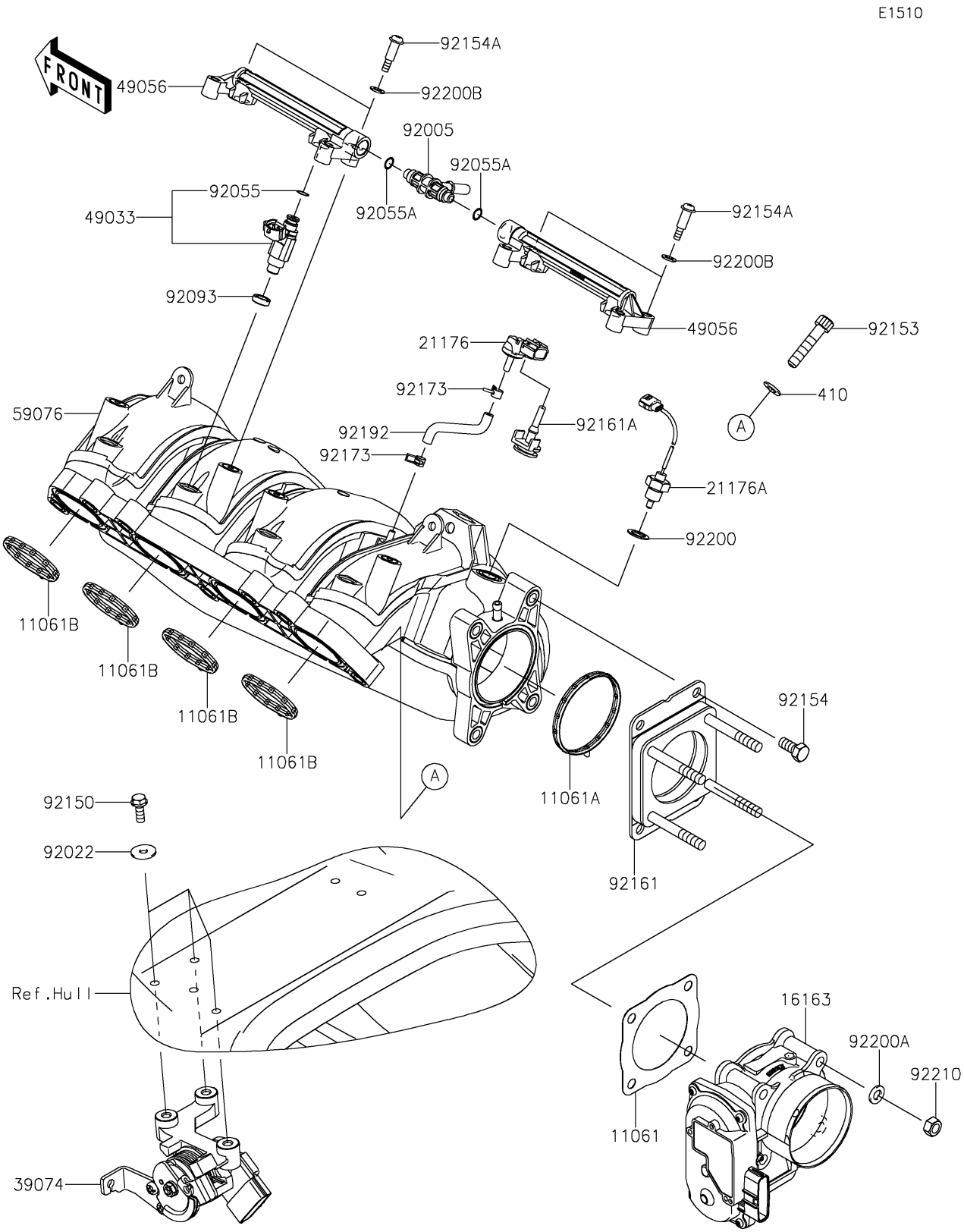

© 2026 Kawasaki Motors Corp., U.S.A.

2021 JET SKI® ULTRA® 310X

PARTS LIST

Throttle

ITEM NAME	PART NUMBER	QUANTITY
GASKET,THROTTLE (Ref # 11061)	11061-0824	1
GASKET,MANIFOLD (Ref # 11061A)	11061-3766	1
GASKET,THROTTLE (Ref # 11061B)	11061-3767	4
THROTTLE-ASSY (Ref # 16163)	16163-1168	1
SENSOR,PRESSURE (Ref # 21176)	21176-0937	1
SENSOR,AIR TEMPERATURE (Ref # 21176A)	21176-3767	1
LEVER-ASSY-THROTTLE (Ref # 39074)	39074-3730	1
WASHER-PLAIN-SMALL,8MM (Ref # 410)	410S0800	7
NOZZLE-INJECTION (Ref # 49033)	49033-3709	4
PIPE-INJECTION,FUEL (Ref # 49056)	49056-3705	2
MANIFOLD-INTAKE (Ref # 59076)	59076-0006	1
FITTING,FUEL PIPE (Ref # 92005)	92005-3766	1
WASHER,6.5X20X1.5 (Ref # 92022)	92022-3710	3
RING-O,INJECTION NOZZLE (Ref # 92055)	92055-1622	4
RING-O (Ref # 92055A)	92055-3782	2
SEAL (Ref # 92093)	92093-0127	4
BOLT,6X18 (Ref # 92150)	92150-3729	3
BOLT,SOCKET,8X40 (Ref # 92153)	92153-0517	7
BOLT (Ref # 92154)	92154-1389	4
BOLT (Ref # 92154A)	92154-3713	4
DAMPER (Ref # 92161)	92161-1635	1
DAMPER (Ref # 92161A)	92161-3796	1
CLAMP (Ref # 92173)	92173-3702	2
TUBE (Ref # 92192)	92192-1361	1
WASHER,12X18X1 (Ref # 92200)	92200-0712	1
WASHER (Ref # 92200A)	92200-3806	4
WASHER (Ref # 92200B)	92200-3807	4
NUT (Ref # 92210)	92210-0897	4

© 2026 Kawasaki Motors Corp., U.S.A.