1990 KX250

PARTS DIAGRAM

Kickstarter Mechanism

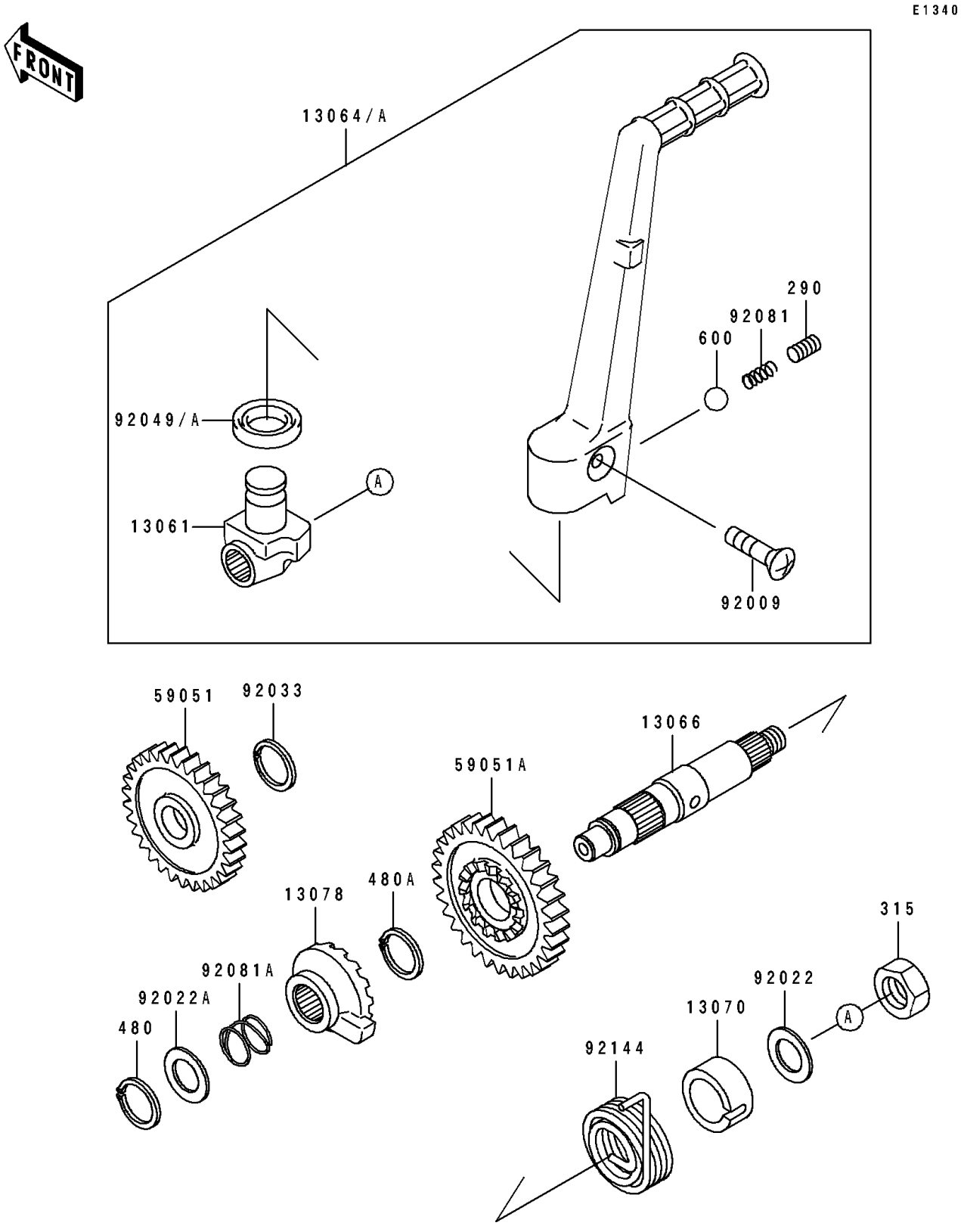

© 2026 Kawasaki Motors Corp., U.S.A.

1990 KX250

PARTS LIST

Kickstarter Mechanism

ITEM NAME	PART NUMBER	QUANTITY
BOSS,KICK PEDAL (Ref # 13061)	13061-1316	1
LEVER-ASSY-KICK,PEDAL (Ref # 13064)	13064-1149	1
SHAFT-KICK (Ref # 13066)	13066-1068	1
GUIDE,KICK SPRING (Ref # 13070)	13070-1063	1
RATCHET (Ref # 13078)	13078-1059	1
GEAR,KICKSTARTER IDLE,26T (Ref # 59051)	59051-1178	1
GEAR-SPUR (Ref # 59051A)	59051-1223	1
SCREW,6X30 (Ref # 92009)	92009-1590	1
WASHER,18.3X22X0.5 (Ref # 92022)	92022-271	1
WASHER,16.8X22X0.5 (Ref # 92022A)	92022-315	1
RING-SNAP,18MM (Ref # 92033)	92033-029	1
SEAL-OIL,KICK PEDAL (Ref # 92049)	92049-1346	1
SPRING,KICK PEDAL (Ref # 92081)	92081-020	1
SPRING,RATCHET (Ref # 92081A)	92081-122	1
SPRING,KICKSTARTER (Ref # 92144)	92144-1076	1
SCREW-SET-SOCKET (Ref # 290)	290P0812	1
NUT-HEX-FINE (Ref # 315)	315G1200	1
CIRCLIP-TYPE-C,16MM (Ref # 480)	480J1600	1
CIRCLIP-TYPE-C,18MM (Ref # 480A)	480J1800	1
BALL-STEEL,1/4" (Ref # 600)	600A0800	1

© 2026 Kawasaki Motors Corp., U.S.A.