2021 MULE PRO-DXT™ EPS DIESEL FE

PARTS DIAGRAM

Sun Top

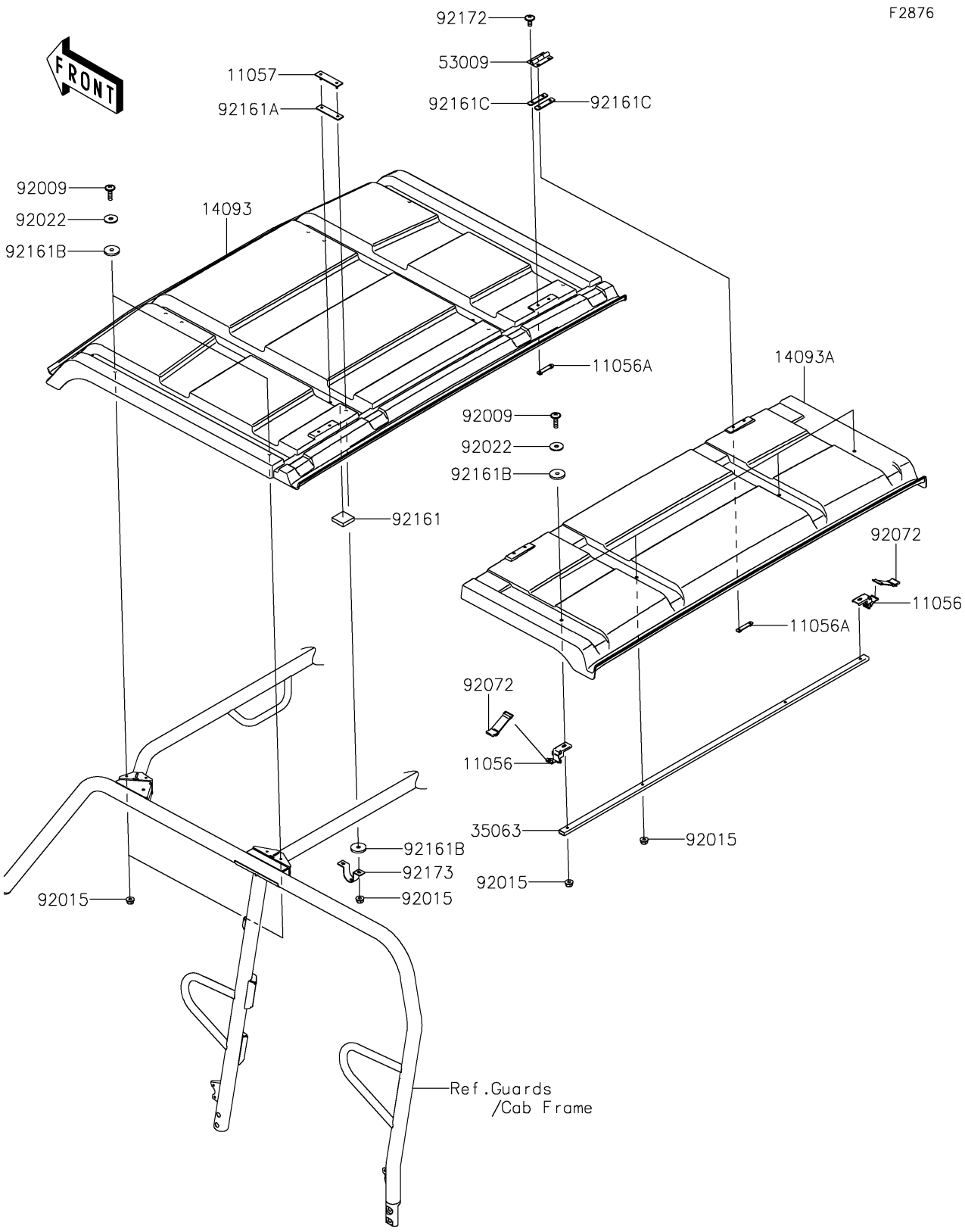

© 2026 Kawasaki Motors Corp., U.S.A.

2021 MULE PRO-DXT™ EPS DIESEL FE

Kawasaki
Let the Good Times Roll®

PARTS LIST

Sun Top

ITEM NAME	PART NUMBER	QUANTITY
BRACKET (Ref # 11056)	11056-3815	2
BRACKET (Ref # 11056A)	11056-3910	4
BRACKET (Ref # 11057)	11057-0074	4
COVER,SUNTOP,FR (Ref # 14093)	14093-0017	1
COVER,SUNTOP,RR (Ref # 14093A)	14093-0018	1
STAY,RR SUNTOP (Ref # 35063)	35063-0944	1
HINGE (Ref # 53009)	53009-0034	2
SCREW,6X22,BLACK (Ref # 92009)	92009-1256	8
NUT,LOCK,FLANGED,6MM (Ref # 92015)	92015-1603	16
WASHER,6.5X22X1.6 (Ref # 92022)	92022-237	8
BAND,TOOL (Ref # 92072)	92072-1176	2
DAMPER,25.4X25.4X6.3 (Ref # 92161)	92161-1405	4
DAMPER (Ref # 92161A)	92161-1476	4
DAMPER,6X25X3.15 (Ref # 92161B)	92161-1633	8
DAMPER (Ref # 92161C)	92161-1650	4
SCREW,6X14 (Ref # 92172)	92172-0004	8
CLAMP,U (Ref # 92173)	92173-1224	4

© 2026 Kawasaki Motors Corp., U.S.A.