2002 KX125

PARTS DIAGRAM

Frame

F2120

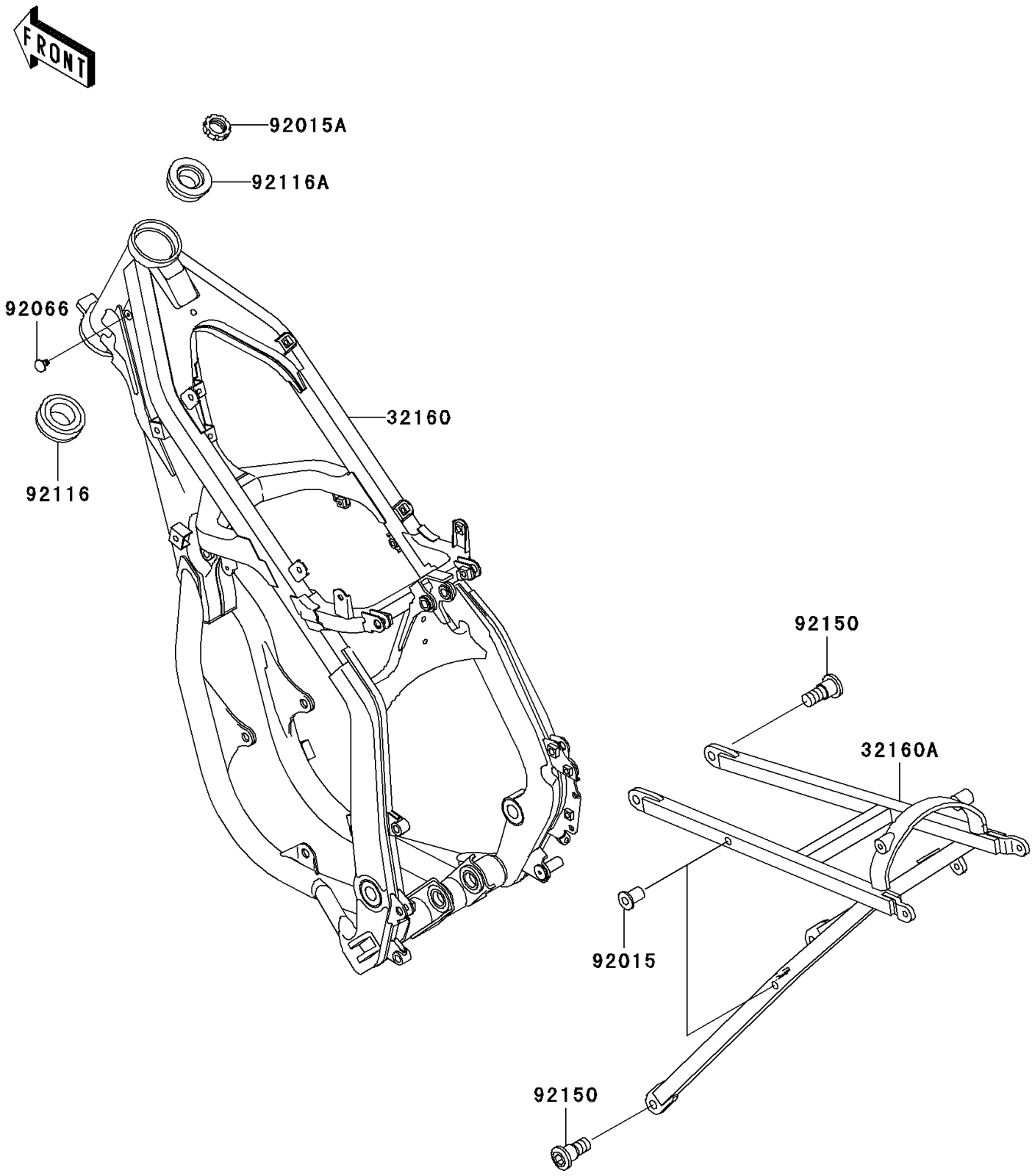

© 2026 Kawasaki Motors Corp., U.S.A.

2002 KX125

PARTS LIST

Frame

ITEM NAME	PART NUMBER	QUANTITY

© 2026 Kawasaki Motors Corp., U.S.A.