2021 KLX®140R F

PARTS DIAGRAM

Stand(s)

F2190

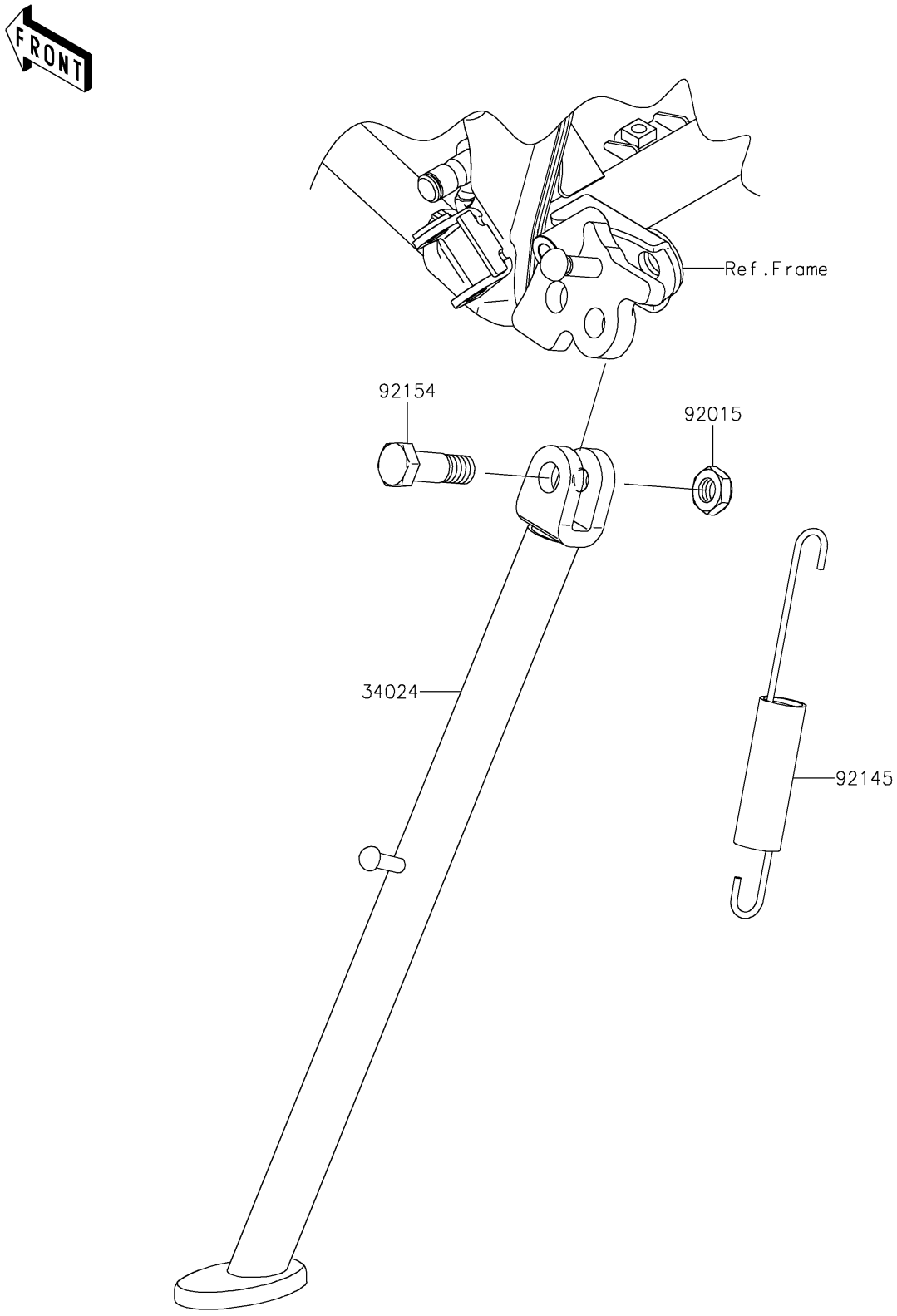

© 2026 Kawasaki Motors Corp., U.S.A.

2021 KLX®140R F

PARTS LIST

Stand(s)

ITEM NAME	PART NUMBER	QUANTITY
STAND-SIDE,P.SILVER (Ref # 34024)	34024-0139-458	1
NUT,LOCK,10MM,BLACK (Ref # 92015)	92015-1188	1
SPRING,SIDE STAND (Ref # 92145)	92145-0584	1
BOLT,SIDE STAND (Ref # 92154)	92154-0412	1

© 2026 Kawasaki Motors Corp., U.S.A.