2021 KLX®140R F

PARTS DIAGRAM

Camshaft(s)/Tensioner

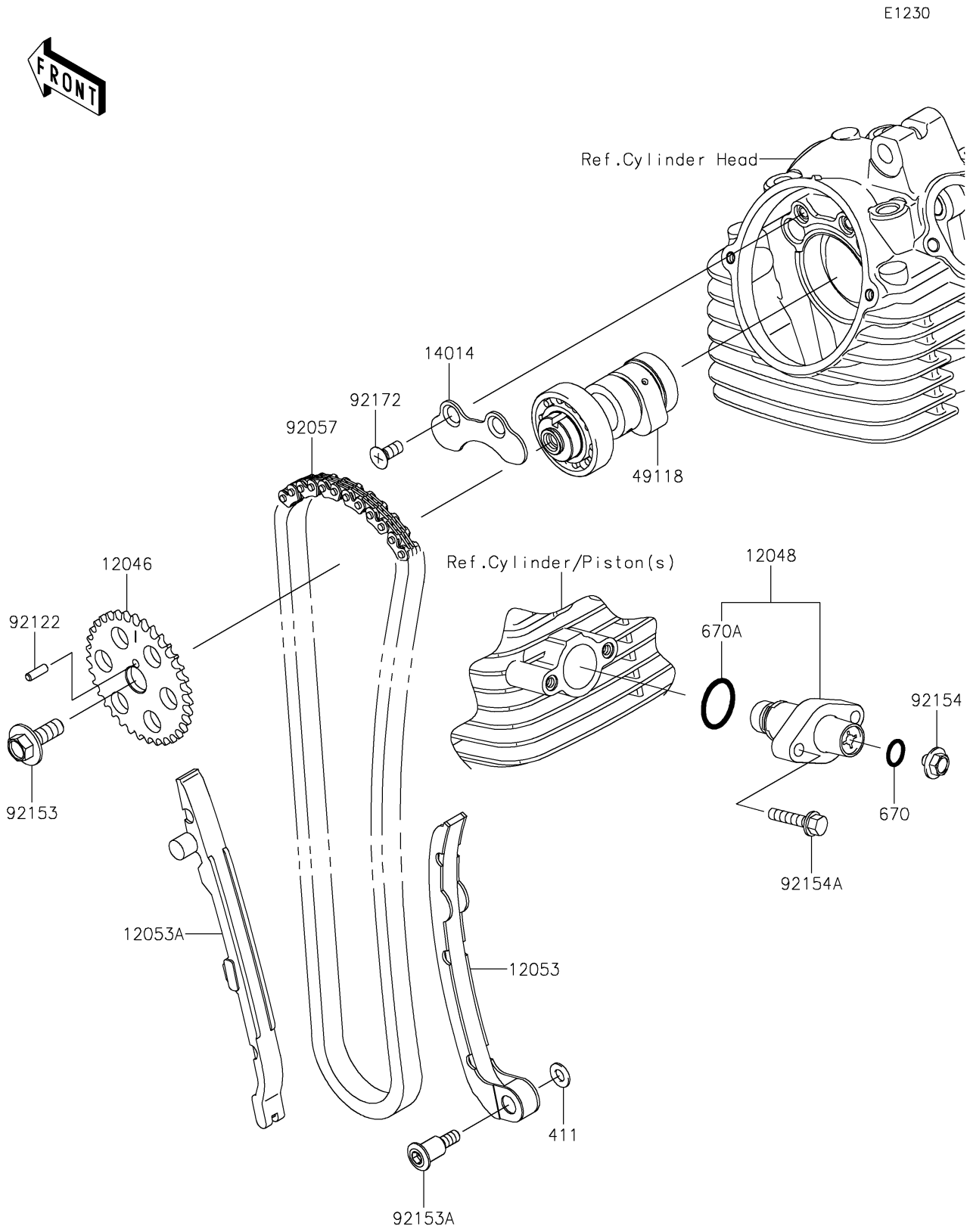

© 2026 Kawasaki Motors Corp., U.S.A.

2021 KLX®140R F

PARTS LIST

Camshaft(s)/Tensioner

ITEM NAME	PART NUMBER	QUANTITY
SPROCKET,36T (Ref # 12046)	12046-0084	1
TENSIONER-ASSY (Ref # 12048)	12048-0052	1
GUIDE-CHAIN,RR (Ref # 12053)	12053-0126	1
GUIDE-CHAIN,FR (Ref # 12053A)	12053-0127	1
PLATE-POSITION (Ref # 14014)	14014-1154	1
WASHER-PLAIN,6MM (Ref # 411)	411AA0600	1
CAMSHAFT-COMP (Ref # 49118)	49118-0893	1
O RING,10MM (Ref # 670)	670D2010	1
O RING,21MM (Ref # 670A)	670D2021	1
CHAIN,CAM (Ref # 92057)	92057-0691	1
ROLLER (Ref # 92122)	92122-0011	1
BOLT,8X23 (Ref # 92153)	92153-1156	1
BOLT,6X26.5 (Ref # 92153A)	92153-1157	1
BOLT (Ref # 92154)	92154-0281	1
BOLT,FLANGED,6X25 (Ref # 92154A)	92154-1196	2
SCREW,6X14 (Ref # 92172)	92172-1055	2

© 2026 Kawasaki Motors Corp., U.S.A.