2021 KLX®140R L

PARTS DIAGRAM

Side Covers/Chain Cover

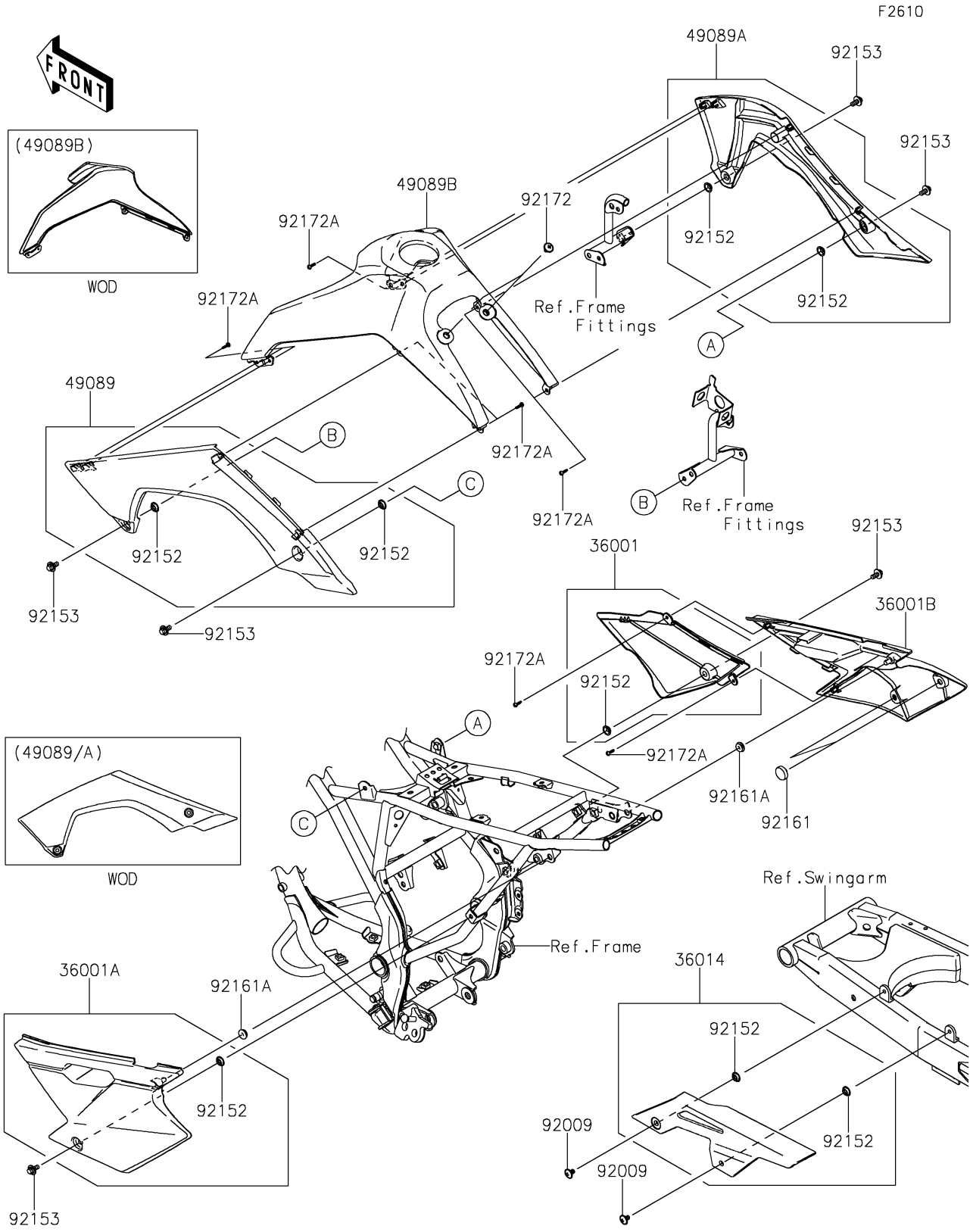

© 2026 Kawasaki Motors Corp., U.S.A.

2021 KLX®140R L

PARTS LIST

Side Covers/Chain Cover

ITEM NAME	PART NUMBER	QUANTITY

© 2026 Kawasaki Motors Corp., U.S.A.