2016 MULE PRO-FX™ EPS LE

PARTS DIAGRAM

Brake Pedal/Throttle Lever

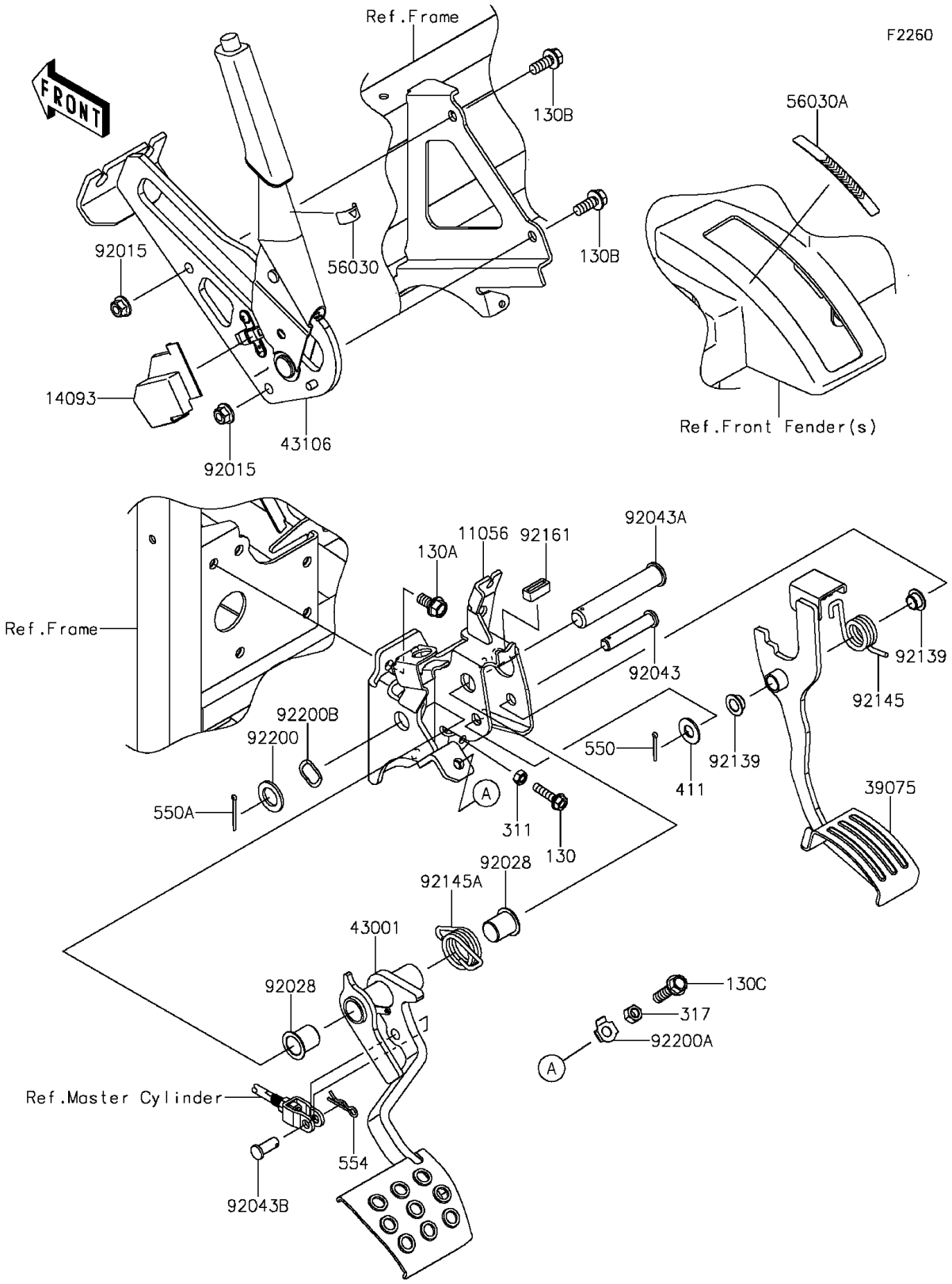

© 2026 Kawasaki Motors Corp., U.S.A.

2016 MULE PRO-FX™ EPS LE

PARTS LIST

Brake Pedal/Throttle Lever

ITEM NAME	PART NUMBER	QUANTITY

© 2026 Kawasaki Motors Corp., U.S.A.