2016 MULE PRO-FX™ EPS LE

PARTS DIAGRAM

Frame Fittings(Front)

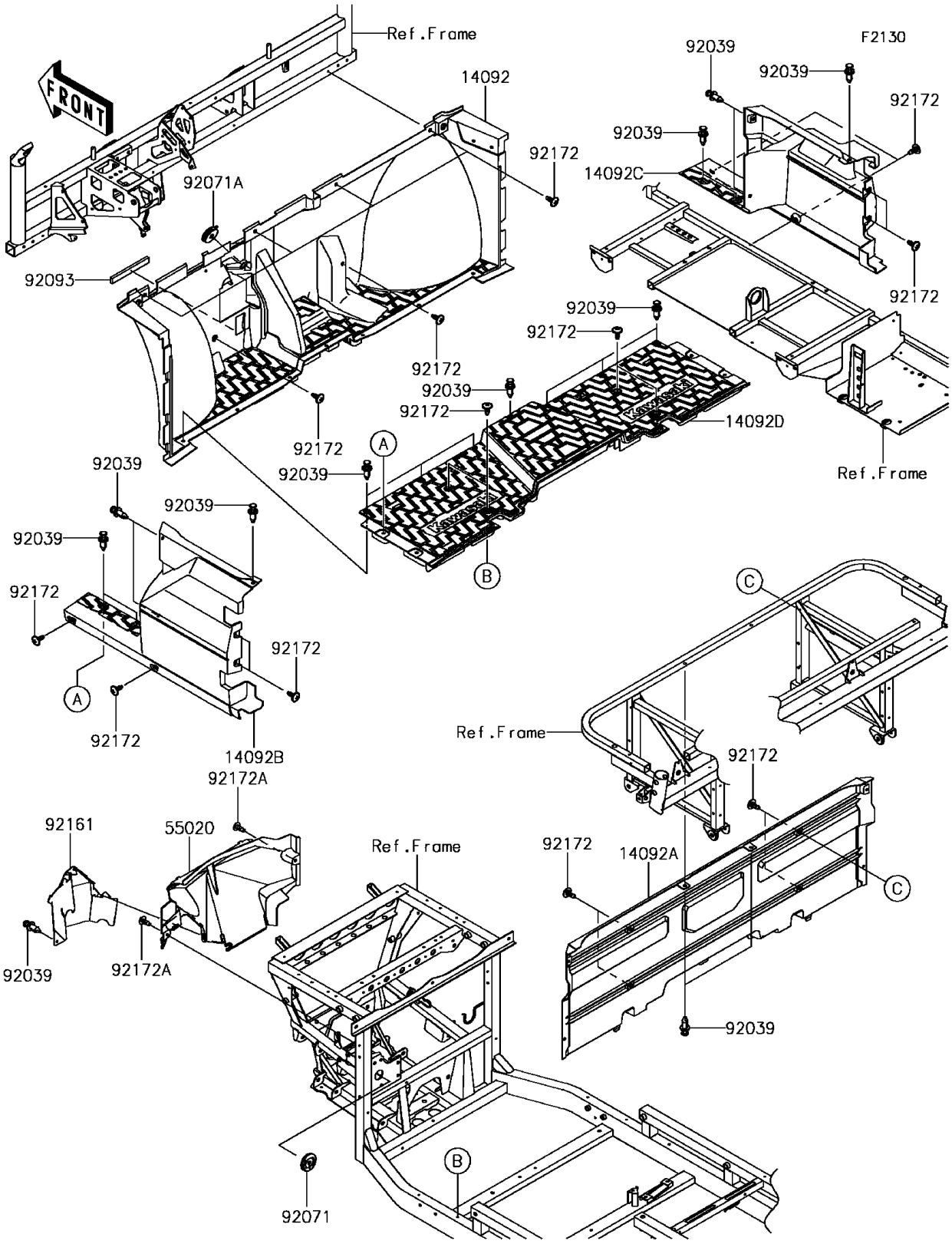

© 2026 Kawasaki Motors Corp., U.S.A.

2016 MULE PRO-FX™ EPS LE

PARTS LIST

Frame Fittings(Front)

ITEM NAME	PART NUMBER	QUANTITY

© 2026 Kawasaki Motors Corp., U.S.A.