2016 MULE PRO-FX™ EPS LE

PARTS DIAGRAM

Cylinder Head Cover

Kawasaki
Let the Good Times Roll®

E1112

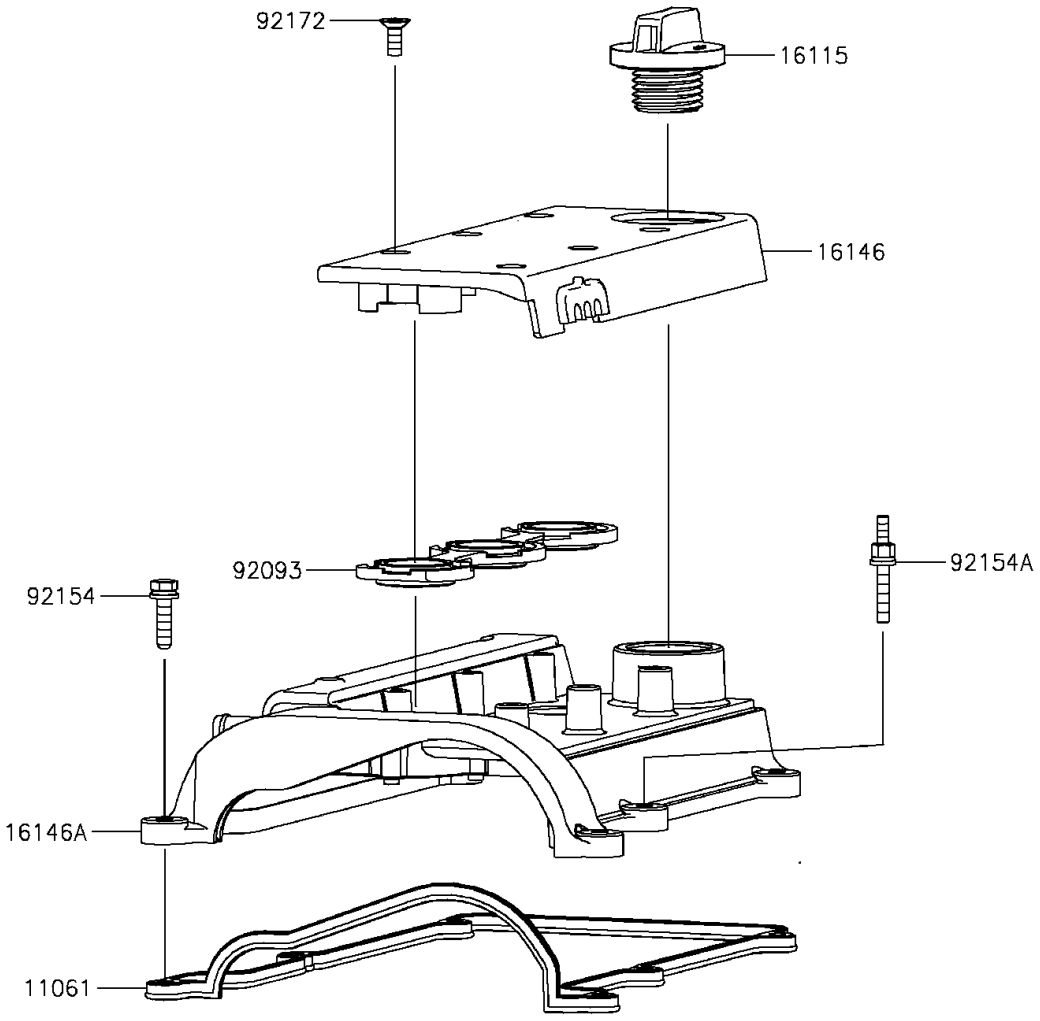

© 2026 Kawasaki Motors Corp., U.S.A.

2016 MULE PRO-FX™ EPS LE

PARTS LIST

Cylinder Head Cover

ITEM NAME	PART NUMBER	QUANTITY
GASKET,HEAD COVER (Ref # 11061)	11061-0953	1
CAP-OIL FILLER (Ref # 16115)	16115-0027	1
COVER-ASSY,SPARK PLUG (Ref # 16146)	16146-0738	1
COVER-ASSY,CYLINDER HEAD (Ref # 16146A)	16146-0741	1
SEAL,SPARK PLUG COVER (Ref # 92093)	92093-0608	1
BOLT,6X25 (Ref # 92154)	92154-1583	5
BOLT (Ref # 92154A)	92154-1584	1
SCREW,6X16 (Ref # 92172)	92172-0905	6

© 2026 Kawasaki Motors Corp., U.S.A.