2000 KX125

PARTS DIAGRAM

Gear Change Mechanism

E1370

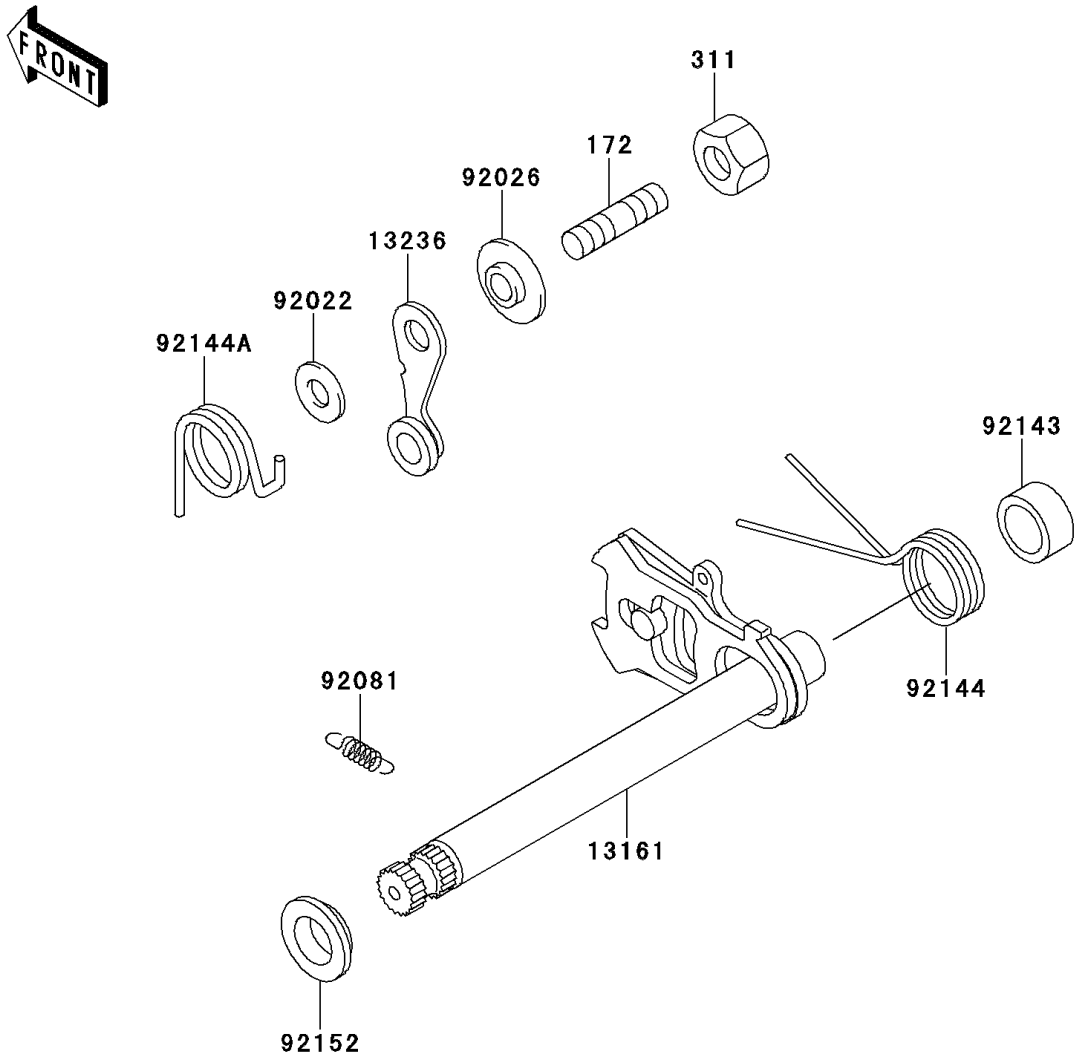

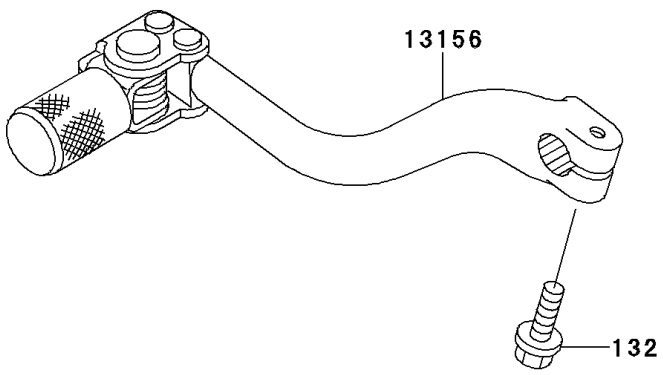

© 2026 Kawasaki Motors Corp., U.S.A.

2000 KX125

PARTS LIST

Gear Change Mechanism

ITEM NAME	PART NUMBER	QUANTITY
BOLT-FLANGED-SMALL (Ref # 132)	132G0625	1
BOLT-STUD,6X12 (Ref # 172)	172G0612	1
NUT-HEX,6MM (Ref # 311)	311G0600	1
LEVER-CHANGE,PEDAL (Ref # 13156)	13156-1347	1
LEVER-COMP-CHANGE SHAFT (Ref # 13161)	13161-1255	1
LEVER-COMP,POSITION (Ref # 13236)	13236-1253	1
WASHER,6X12.8X1.2 (Ref # 92022)	92022-1827	1
SPACER (Ref # 92026)	92026-1217	1
SPRING,CHANGE LEVER (Ref # 92081)	92081-076	1
COLLAR (Ref # 92143)	92143-1148	1
SPRING,CHANGE SHAFT RETURN (Ref # 92144)	92144-1736	1
SPRING,LEVER POSITION (Ref # 92144A)	92144-1873	1
COLLAR (Ref # 92152)	92152-1075	1

© 2026 Kawasaki Motors Corp., U.S.A.