2016 MULE PRO-FX™ EPS

PARTS DIAGRAM

Oil Pump/Oil Filter

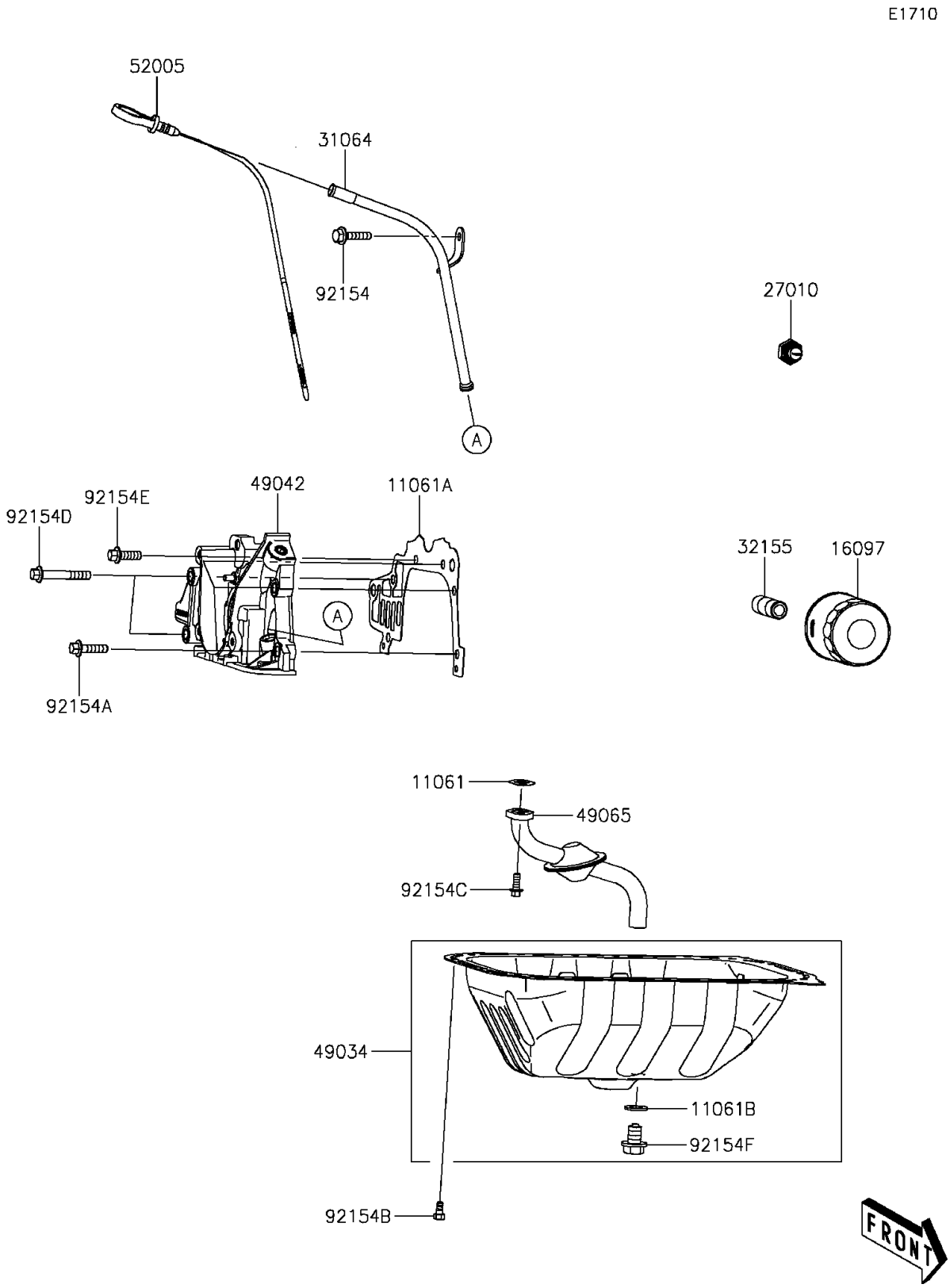

© 2026 Kawasaki Motors Corp., U.S.A.

2016 MULE PRO-FX™ EPS

PARTS LIST

Oil Pump/Oil Filter

ITEM NAME	PART NUMBER	QUANTITY
GASKET,OIL PICKUP (Ref # 11061)	11061-0957	1
GASKET,OIL PUMP (Ref # 11061A)	11061-0958	1
GASKET,DRAIN (Ref # 11061B)	11061-0962	1
FILTER-ASSY-OIL (Ref # 16097)	16097-0010	1
SWITCH,OIL PRESSURE (Ref # 27010)	27010-0804	1
PIPE-COMP,LEVEL GAUGE (Ref # 31064)	31064-0633	1
PIPE,OIL FILTER (Ref # 32155)	32155-1893	1
PAN-OIL (Ref # 49034)	49034-0558	1
PUMP-OIL (Ref # 49042)	49042-0001	1
FILTER-OIL (Ref # 49065)	49065-0029	1
GAUGE,OIL LEVEL (Ref # 52005)	52005-0728	1
BOLT,FLANGED (Ref # 92154)	92154-1579	1
BOLT,FLANGED,8X30 (Ref # 92154A)	92154-1592	3
BOLT,6X12 (Ref # 92154B)	92154-1594	17
BOLT,FLANGED,6X16 (Ref # 92154C)	92154-1596	2
BOLT,FLANGED,8X55 (Ref # 92154D)	92154-1601	2
BOLT,FLANGED,8X25 (Ref # 92154E)	92154-1602	1
BOLT,DRAIN (Ref # 92154F)	92154-1635	1

© 2026 Kawasaki Motors Corp., U.S.A.