2015 MULE PRO-FXT™ EPS CAMO

PARTS DIAGRAM

Cylinder Head Cover

E1112

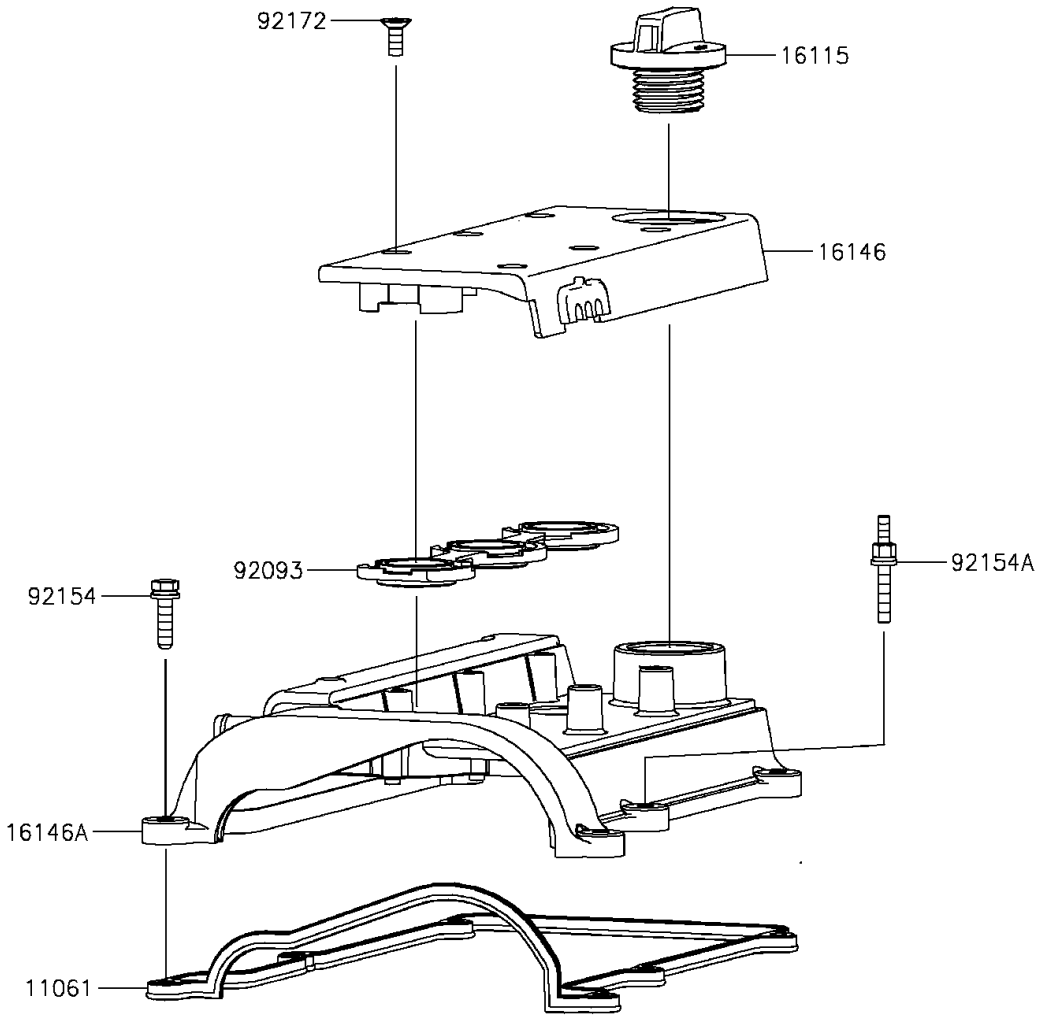

© 2026 Kawasaki Motors Corp., U.S.A.

2015 MULE PRO-FXT™ EPS CAMO

PARTS LIST

Cylinder Head Cover

ITEM NAME	PART NUMBER	QUANTITY

© 2026 Kawasaki Motors Corp., U.S.A.