2015 MULE PRO-FXT™ EPS

PARTS DIAGRAM

Decals(Green)(BFF)

F2861A

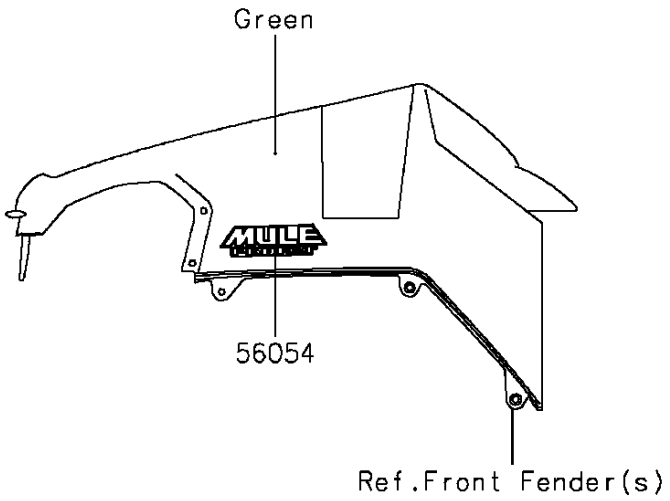

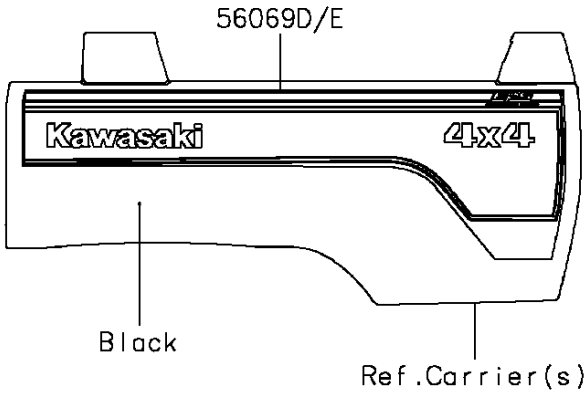

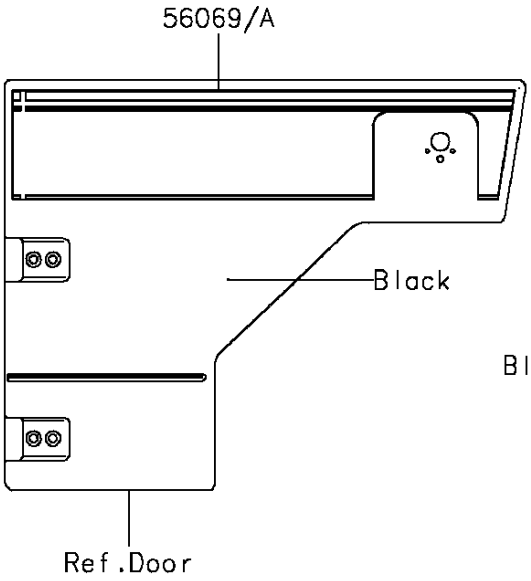

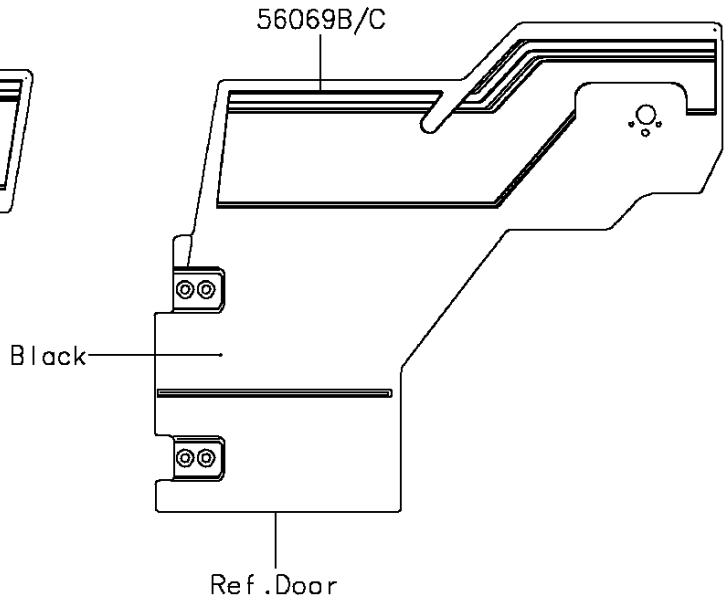

© 2026 Kawasaki Motors Corp., U.S.A.

2015 MULE PRO-FXT™ EPS

PARTS LIST

Decals(Green)(BFF)

ITEM NAME	PART NUMBER	QUANTITY
MARK,FR FENDER,MULE PRO FXT (Ref # 56054)	56054-1529	2
PATTERN,SIDE GUARD,FR,LH (Ref # 56069)	56069-7329	1
PATTERN,SIDE GUARD,FR,RH (Ref # 56069A)	56069-7330	1
PATTERN,SIDE GUARD,RR,LH (Ref # 56069B)	56069-7331	1
PATTERN,SIDE GUARD,RR,RH (Ref # 56069C)	56069-7332	1
PATTERN,CARRIER COVER,LH (Ref # 56069D)	56069-7333	1
PATTERN,CARRIER COVER,RH (Ref # 56069E)	56069-7334	1

© 2026 Kawasaki Motors Corp., U.S.A.