2015 MULE PRO-FXT™ EPS

PARTS DIAGRAM

Gear Change Mechanism

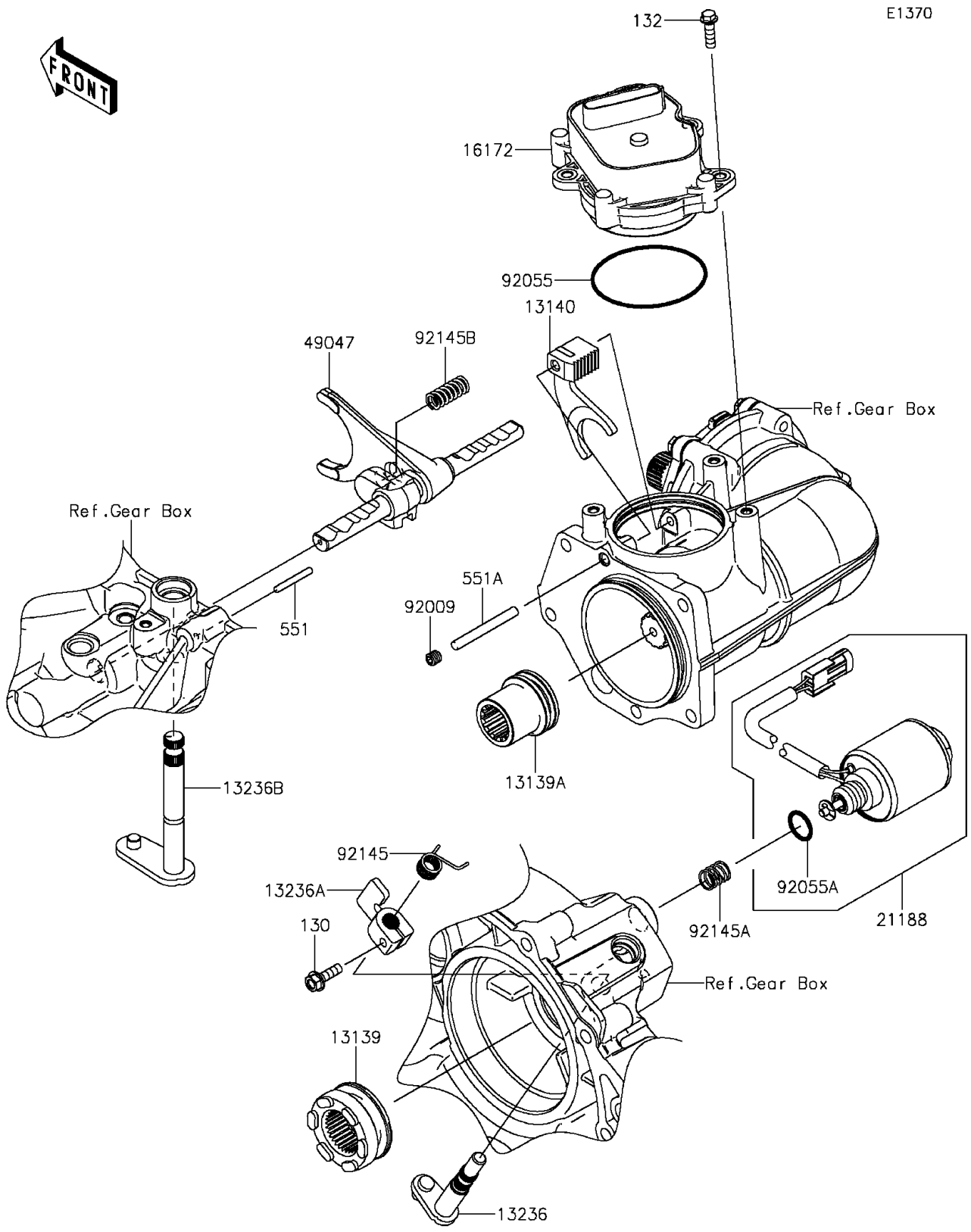

© 2026 Kawasaki Motors Corp., U.S.A.

2015 MULE PRO-FXT™ EPS

PARTS LIST

Gear Change Mechanism

ITEM NAME	PART NUMBER	QUANTITY

© 2026 Kawasaki Motors Corp., U.S.A.