2015 MULE PRO-FXT™ EPS

PARTS DIAGRAM

Cylinder Head

E1111

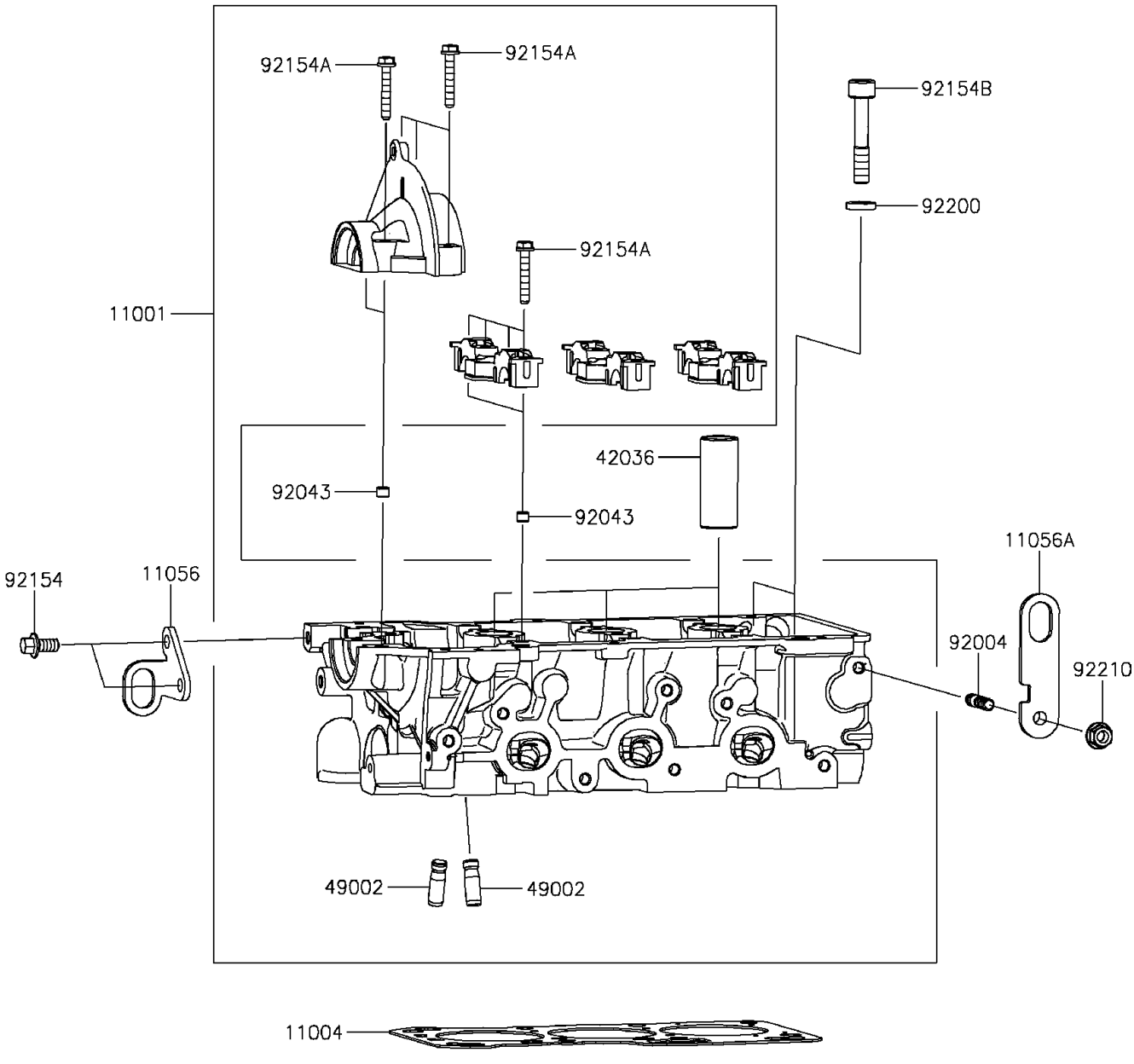

© 2026 Kawasaki Motors Corp., U.S.A.

2015 MULE PRO-FXT™ EPS

PARTS LIST

Cylinder Head

ITEM NAME	PART NUMBER	QUANTITY

© 2026 Kawasaki Motors Corp., U.S.A.