2015 MULE PRO-FXT™

PARTS DIAGRAM

Ignition Switch

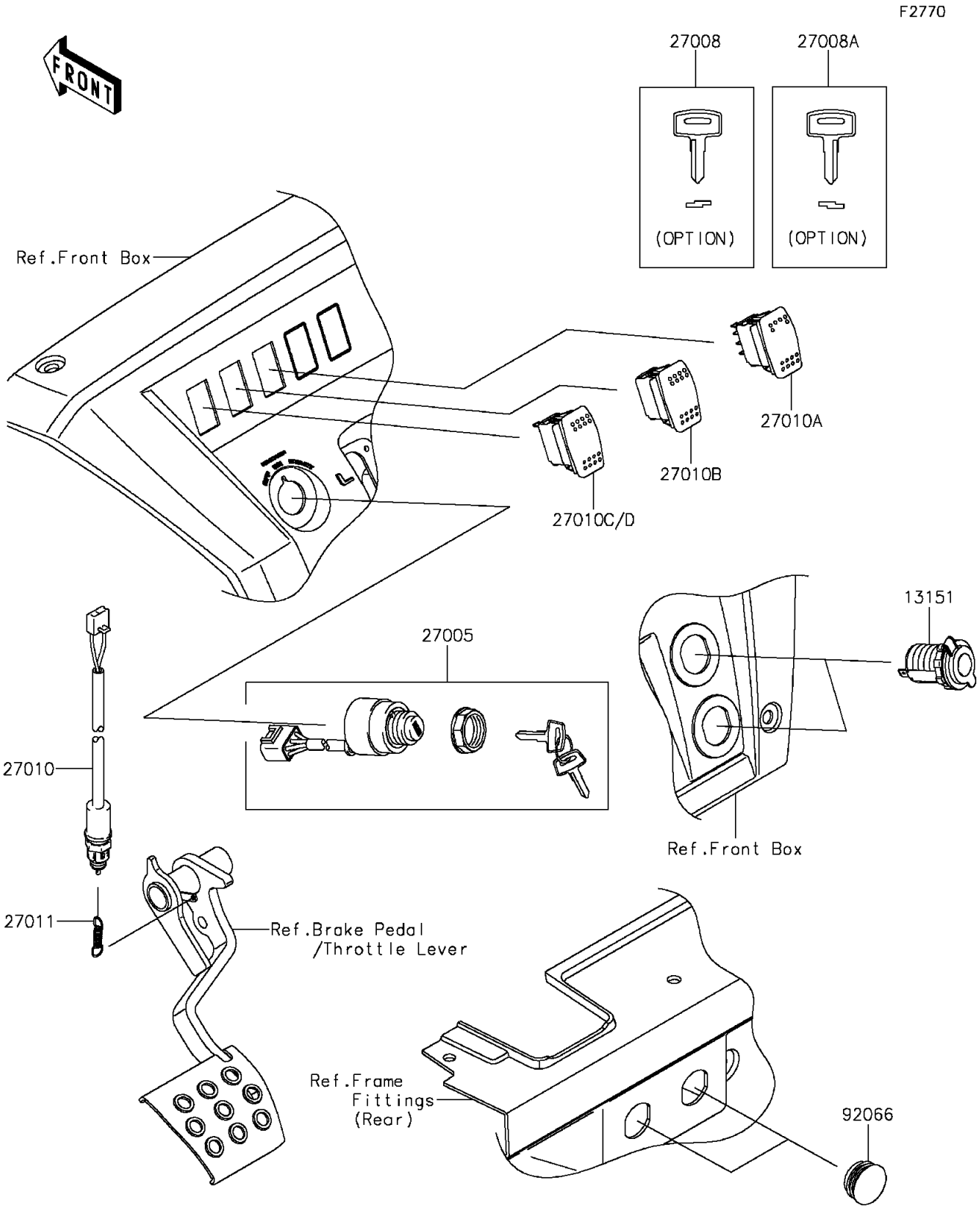

© 2026 Kawasaki Motors Corp., U.S.A.

2015 MULE PRO-FXT™

PARTS LIST

Ignition Switch

ITEM NAME	PART NUMBER	QUANTITY
SWITCH-COMP,OUTLET,12V (Ref # 13151)	13151-0556	2
SWITCH-ASSY-IGNITION (Ref # 27005)	27005-0585	1
KEY-LOCK,BLANK (Ref # 27008)	27008-1153	1
KEY-LOCK,BLANK (Ref # 27008A)	27008-1157	1
SWITCH,BRAKE (Ref # 27010)	27010-0724	1
SWITCH,HEAD LAMP (Ref # 27010A)	27010-0750	1
SWITCH,2WD/4WD (Ref # 27010B)	27010-0751	1
SWITCH,DIFF LOCK (Ref # 27010C)	27010-0752	1
SPRING,BRAKE LAMP SWITCH (Ref # 27011)	27011-006	1
PLUG,D.C. SOCKET (Ref # 92066)	92066-0794	2

© 2026 Kawasaki Motors Corp., U.S.A.