2015 MULE PRO-FXT™

PARTS DIAGRAM

Converter Cover

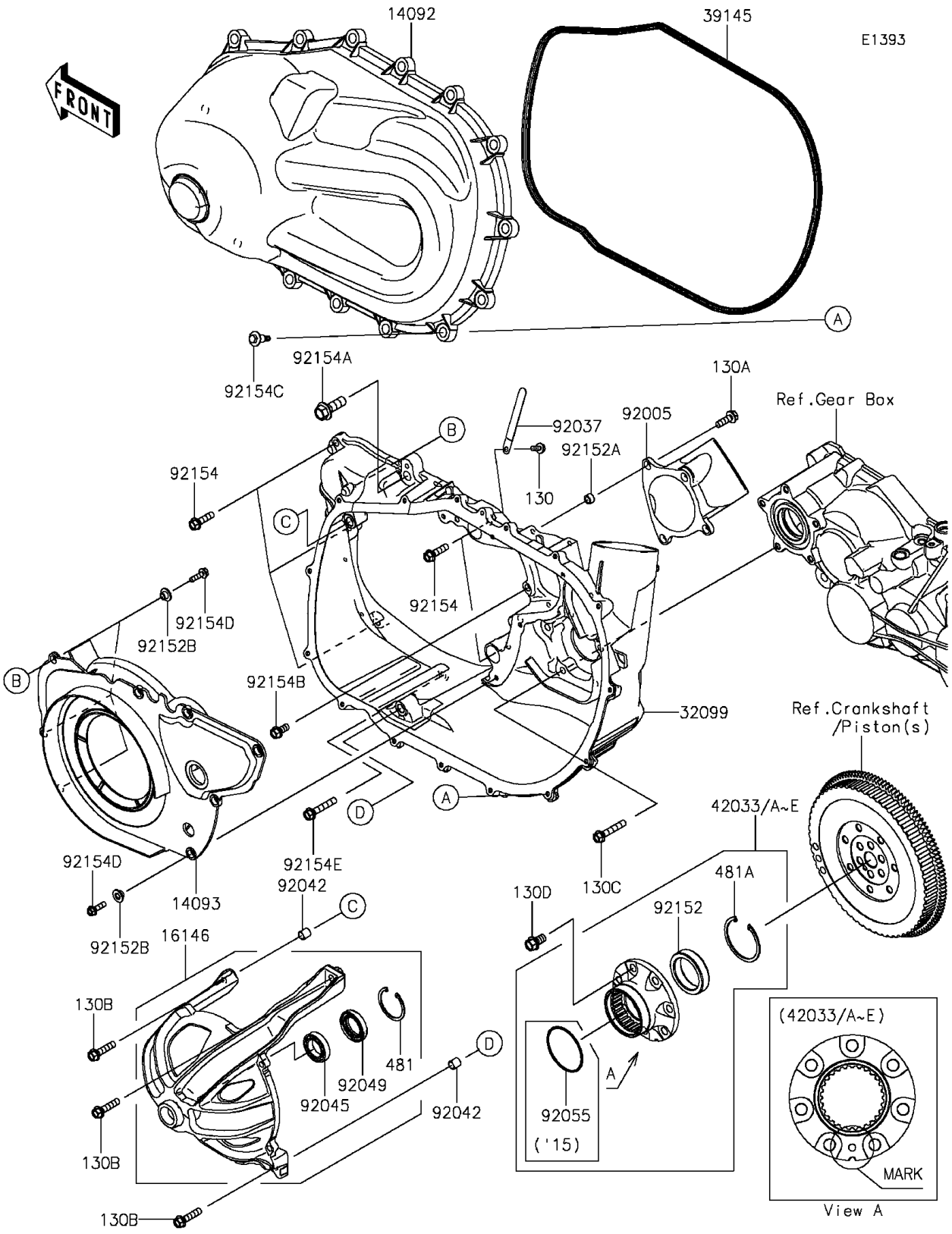

© 2026 Kawasaki Motors Corp., U.S.A.

2015 MULE PRO-FXT™

PARTS LIST

Converter Cover

ITEM NAME	PART NUMBER	QUANTITY
BOLT-FLANGED,6X14 (Ref # 130)	130BA0614	1
BOLT-FLANGED,8X25 (Ref # 130A)	130BA0825	4
BOLT-FLANGED,8X35 (Ref # 130B)	130BA0835	3
BOLT-FLANGED,8X45 (Ref # 130C)	130BA0845	5
BOLT-FLANGED,10X18 (Ref # 130D)	130CA1018	7
COVER,CVT (Ref # 14092)	14092-1202	1
COVER (Ref # 14093)	14093-0050	1
COVER-ASSY (Ref # 16146)	16146-0734	1
CASE,CVT (Ref # 32099)	32099-0746	1
TRIM-SEAL (Ref # 39145)	39145-0047	1
COUPLING-ASSY,B MARK,WHITE (Ref # 42033)	42033-0577	1
COUPLING-ASSY,A MARK,BLUE (Ref # 42033A)	42033-0579	1
COUPLING-ASSY,C MARK,YELLOW (Ref # 42033B)	42033-0580	1
CIRCLIP-TYPE-C,45MM (Ref # 481)	481J4500	1
CIRCLIP (Ref # 481A)	481J6200	1
FITTING,INTAKE (Ref # 92005)	92005-0762	1
CLAMP (Ref # 92037)	92037-1993	1
PIN,DOWEL,12X14 (Ref # 92042)	92042-031	2
BEARING-BALL,#6905 (Ref # 92045)	92045-036	1
SEAL-OIL,HTC 28X45X8 (Ref # 92049)	92049-0767	1
RING-O,2.4X62.6 (Ref # 92055)	92055-0790	1
COLLAR (Ref # 92152)	92152-1822	1
COLLAR,8.8X12.3X6.9 (Ref # 92152A)	92152-1853	4
COLLAR (Ref # 92152B)	92152-1931	8
BOLT,FLANGED,8X30 (Ref # 92154)	92154-0850	5
BOLT,FLANGED,12X35 (Ref # 92154A)	92154-1337	1
BOLT,FLANGED,8X18 (Ref # 92154B)	92154-1386	1
BOLT,CVT COVER (Ref # 92154C)	92154-1522	15
BOLT,FLANGED,6X22 (Ref # 92154D)	92154-1525	8

© 2026 Kawasaki Motors Corp., U.S.A.

2015 MULE PRO-FXT™

PARTS LIST

Converter Cover

ITEM NAME	PART NUMBER	QUANTITY
BOLT,FLANGED,8X45 (Ref # 92154E)	92154-1526	1

© 2026 Kawasaki Motors Corp., U.S.A.