# 2019 MULE PRO-FX™ EPS LE

## PARTS DIAGRAM

### Cylinder Head

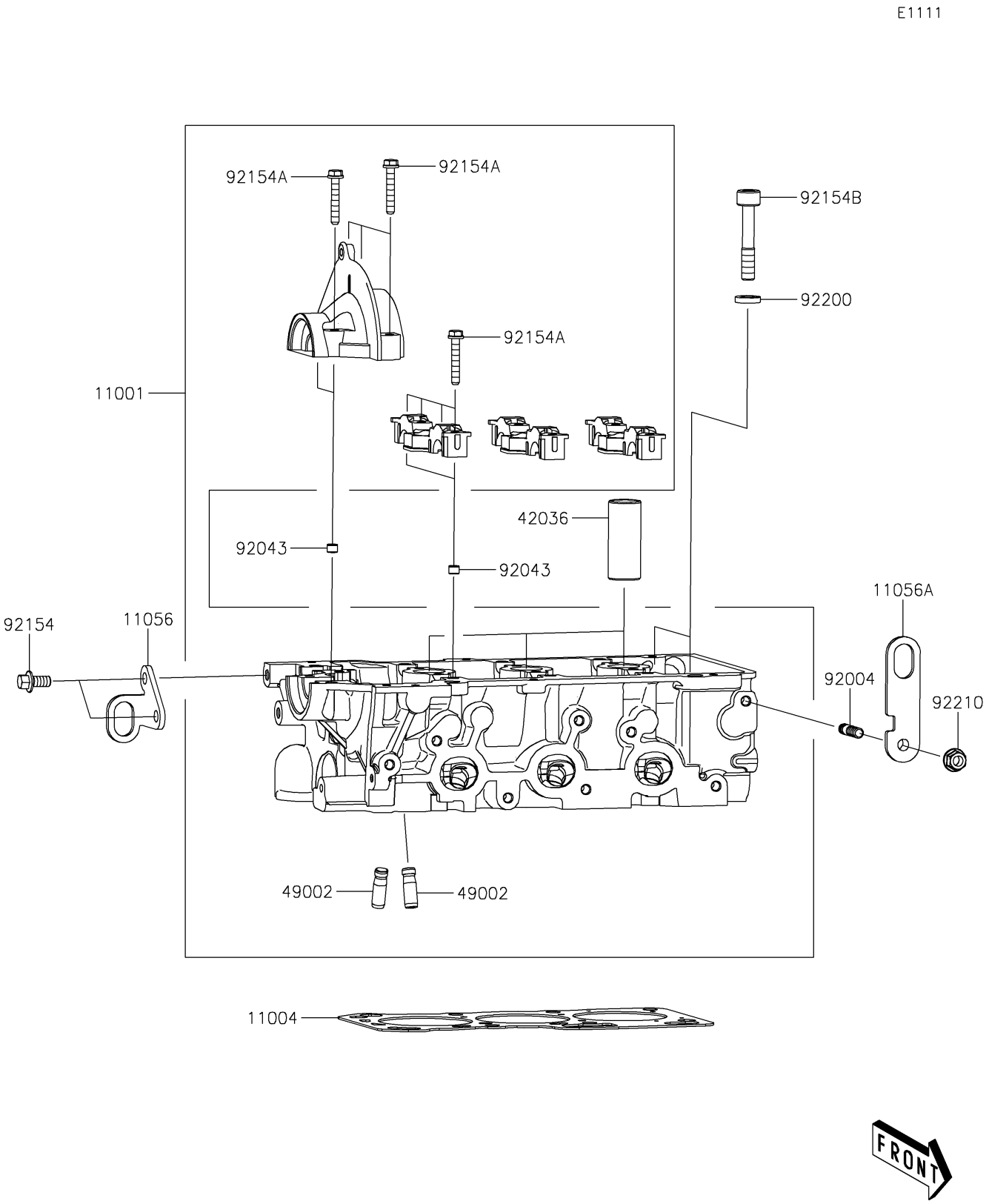


© 2026 Kawasaki Motors Corp., U.S.A.

# 2019 MULE PRO-FX™ EPS LE

## PARTS LIST

### Cylinder Head

| ITEM NAME | PART NUMBER | QUANTITY |
|---|---|---|
| HEAD-CYLINDER (Ref # 11001) | 11001-0839 | 1 |
| GASKET-HEAD (Ref # 11004) | 11004-0747 | 1 |
| BRACKET (Ref # 11056) | 11056-7081 | 1 |
| BRACKET (Ref # 11056A) | 11056-7082 | 1 |
| SLEEVE,SPARK PLUG (Ref # 42036) | 42036-0764 | 3 |
| GUIDE-VALVE (Ref # 49002) | 49002-0030 | 12 |
| STUD (Ref # 92004) | 92004-0734 | 1 |
| PIN (Ref # 92043) | 92043-0831 | 8 |
| BOLT,FLANGED,8X16 (Ref # 92154) | 92154-1588 | 2 |
| BOLT,6X38 (Ref # 92154A) | 92154-1589 | 17 |
| BOLT,SOCKET (Ref # 92154B) | 92154-1590 | 8 |
| WASHER (Ref # 92200) | 92200-1683 | 8 |
| NUT (Ref # 92210) | 92210-0944 | 1 |

© 2026 Kawasaki Motors Corp., U.S.A.