2020 MULE PRO-FXT™ RANCH EDITION

Kawasaki
Let the Good Times Roll®

PARTS DIAGRAM

Other

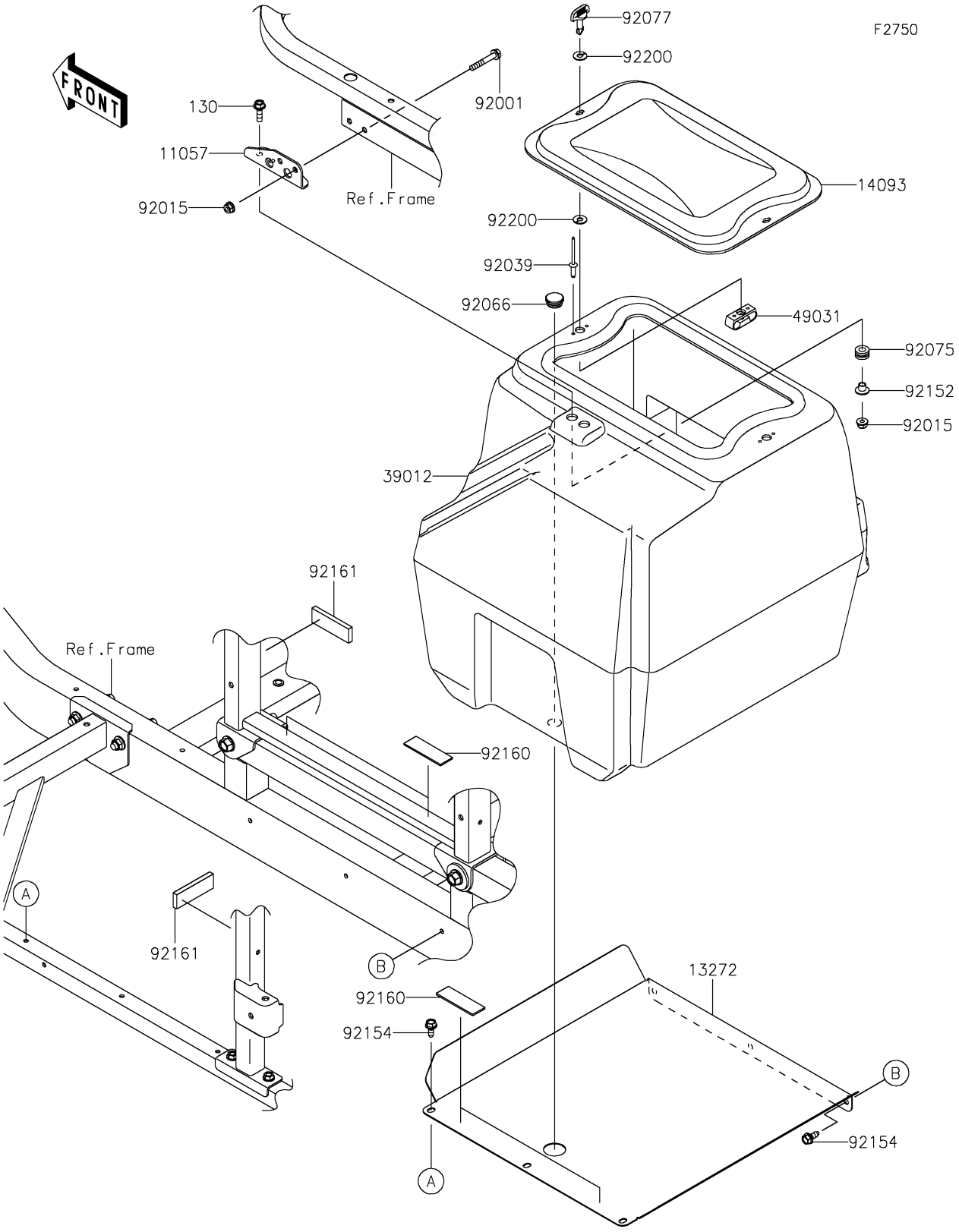

© 2026 Kawasaki Motors Corp., U.S.A.

2020 MULE PRO-FXT™ RANCH EDITION

Kawasaki
Let the Good Times Roll®

PARTS LIST

Other

ITEM NAME	PART NUMBER	QUANTITY

© 2026 Kawasaki Motors Corp., U.S.A.