# 2018 MULE PRO-FXT™ RANCH EDITION

Kawasaki
Let the Good Times Roll®

## PARTS DIAGRAM

### Frame Fittings(Front)

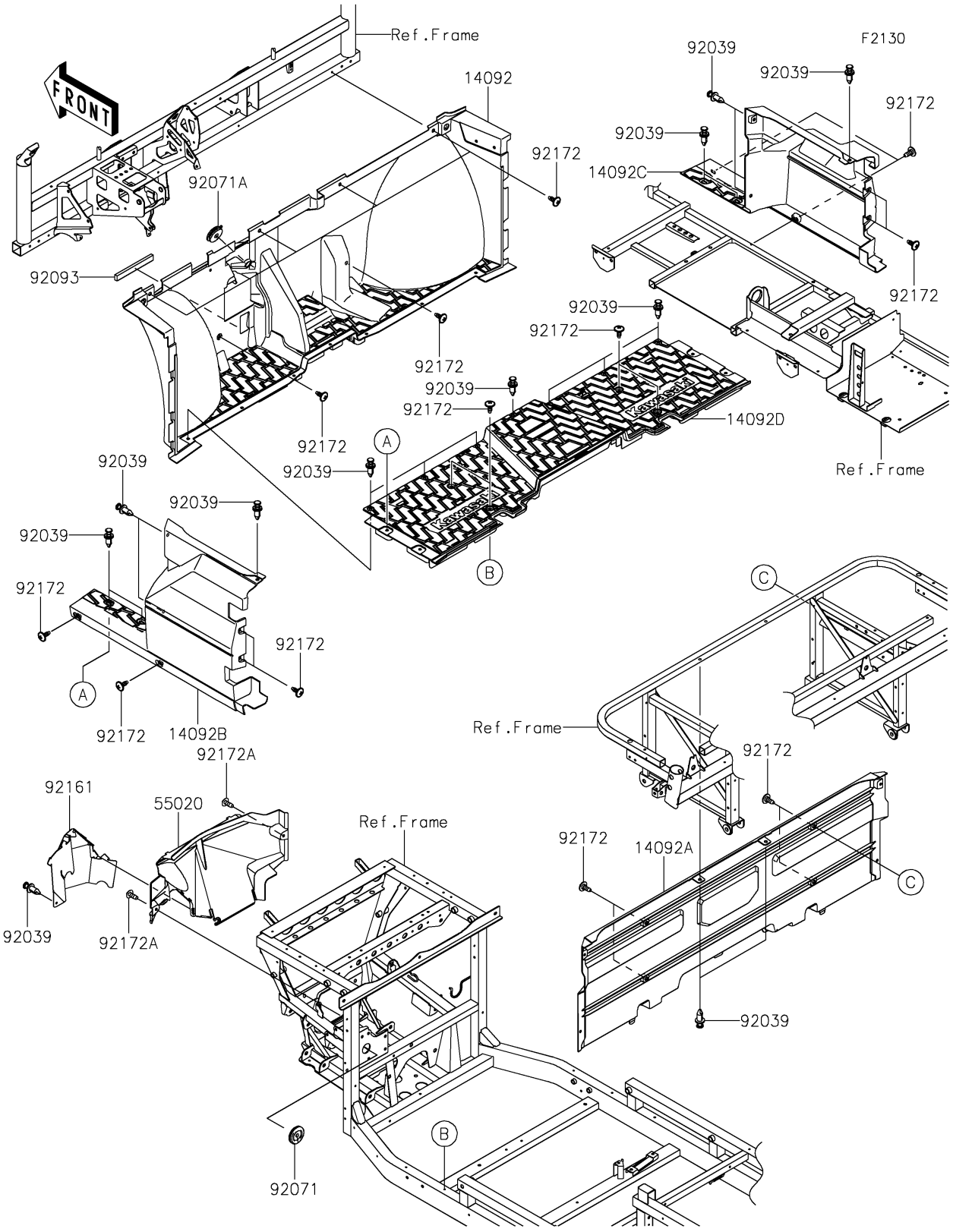


© 2026 Kawasaki Motors Corp., U.S.A.

# 2018 MULE PRO-FXT™ RANCH EDITION

Kawasaki
Let the Good Times Roll®

## PARTS LIST

### Frame Fittings(Front)

| ITEM NAME | PART NUMBER | QUANTITY |
|---|---|---|
| COVER,FR FLOOR (Ref # 14092) | 14092-1184 | 1 |
| COVER,FR SEAT (Ref # 14092A) | 14092-1185 | 1 |
| COVER,SIDE,LH,FR (Ref # 14092B) | 14092-1188 | 1 |
| COVER,SIDE,RH,FR (Ref # 14092C) | 14092-1189 | 1 |
| COVER,FLOOR,BOTTOM (Ref # 14092D) | 14092-1196 | 1 |
| GUARD (Ref # 55020) | 55020-0961 | 1 |
| RIVET (Ref # 92039) | 92039-0776 | 20 |
| GROMMET,9X45X9 (Ref # 92071) | 92071-0728 | 1 |
| GROMMET,8X22X8 (Ref # 92071A) | 92071-0753 | 1 |
| SEAL,10X20X165 (Ref # 92093) | 92093-0617 | 1 |
| DAMPER (Ref # 92161) | 92161-1649 | 1 |
| SCREW,6X16 (Ref # 92172) | 92172-0711 | 22 |
| SCREW,TAPPING,6X16 (Ref # 92172A) | 92172-0739 | 2 |

© 2026 Kawasaki Motors Corp., U.S.A.