2018 MULE PRO-FXT™ EPS CAMO

PARTS DIAGRAM

Other

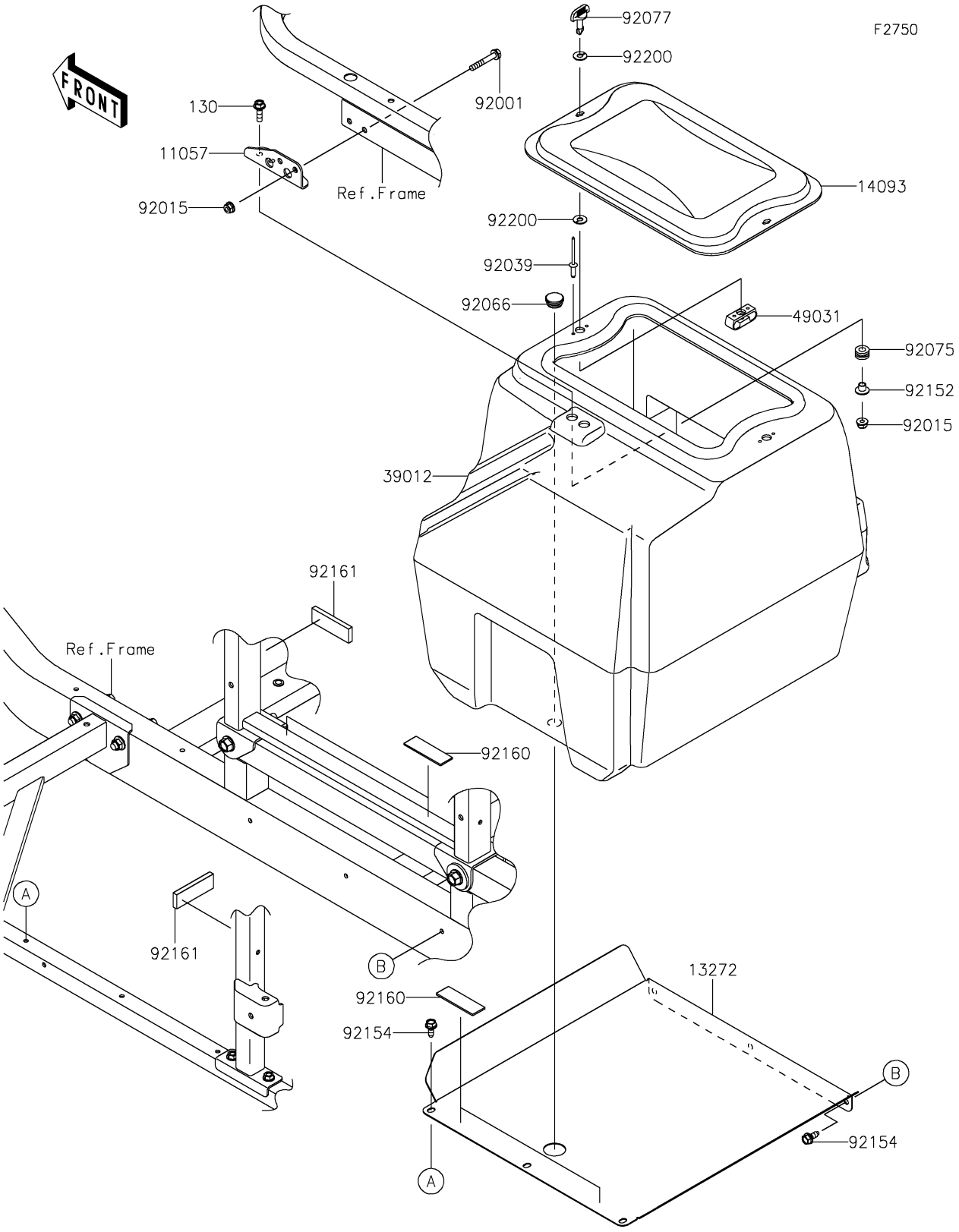

© 2026 Kawasaki Motors Corp., U.S.A.

2018 MULE PRO-FXT™ EPS CAMO

PARTS LIST

Other

ITEM NAME	PART NUMBER	QUANTITY
BRACKET,TUB MOUNT (Ref # 11057)	11057-1503	1
BOLT-FLANGED,6X20 (Ref # 130)	130BA0620	2
PLATE,FLOOR BOTTOM (Ref # 13272)	13272-2205	1
COVER,STORAGE BOX (Ref # 14093)	14093-0523	1
CASE-STORAGE (Ref # 39012)	39012-0046	1
LATCH (Ref # 49031)	49031-0008	2
BOLT,FLANGED,6X38 (Ref # 92001)	92001-1105	2
NUT,LOCK,FLANGED,6MM (Ref # 92015)	92015-1603	4
RIVET,3.2X9.5 (Ref # 92039)	92039-0785	4
PLUG (Ref # 92066)	92066-1306	1
DAMPER (Ref # 92075)	92075-1912	2
KNOB (Ref # 92077)	92077-0030	2
COLLAR,6.3X8.3X9.2 (Ref # 92152)	92152-0237	2
BOLT,6X15.6 (Ref # 92154)	92154-1250	6
DAMPER (Ref # 92160)	92160-1075	4
DAMPER,20X60X6 (Ref # 92161)	92161-1874	2
WASHER (Ref # 92200)	92200-0503	4

© 2026 Kawasaki Motors Corp., U.S.A.