2018 MULE PRO-FXT™ EPS CAMO

PARTS DIAGRAM

Guards/Cab Frame

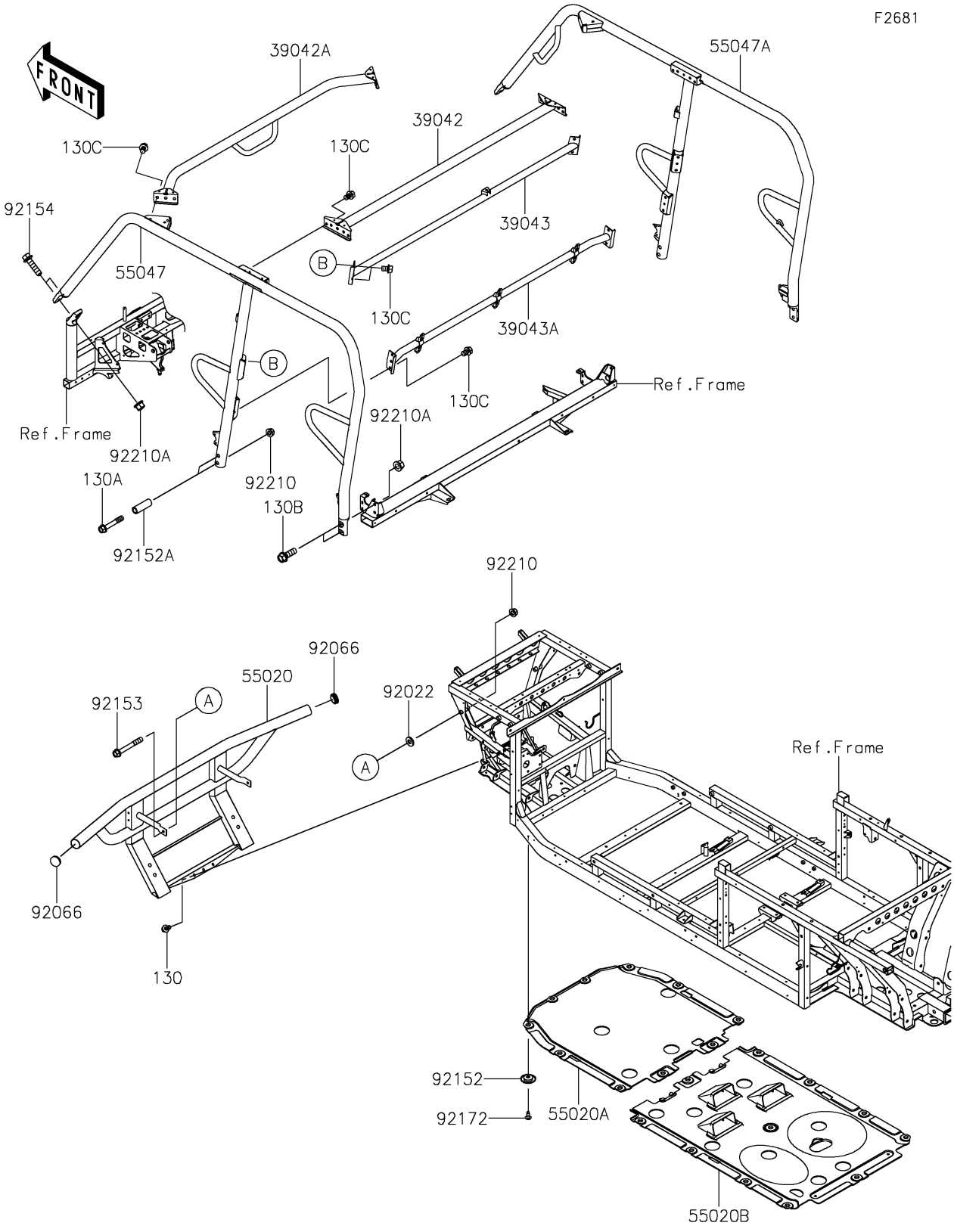

© 2026 Kawasaki Motors Corp., U.S.A.

2018 MULE PRO-FXT™ EPS CAMO

PARTS LIST

Guards/Cab Frame

ITEM NAME	PART NUMBER	QUANTITY
BOLT-FLANGED,8X16 (Ref # 130)	130BA0816	3
BOLT-FLANGED,10X60 (Ref # 130A)	130BA1060	4
BOLT-FLANGED,12X35 (Ref # 130B)	130BA1235	4
BOLT-FLANGED,10X14 (Ref # 130C)	130CA1014	20
CROSSMEMBER,RR,T.BLACK (Ref # 39042)	39042-0015-388	1
CROSSMEMBER,FR,T.BLACK (Ref # 39042A)	39042-0016-388	1
CROSSMEMBER-COMP,B-P.,UPP,BLK (Ref # 39043)	39043-0016-388	1
CROSSMEMBER-COMP,B-P.,LWR,BLK (Ref # 39043A)	39043-0017-388	1
GUARD,FR PIPE,T.BLACK (Ref # 55020)	55020-0933-388	1
GUARD,SKID PLATE (Ref # 55020A)	55020-0934	1
GUARD,SKID PLATE (Ref # 55020B)	55020-0935	1
BAR-COMP,LH,T.BLACK (Ref # 55047)	55047-0361-388	1
BAR-COMP,RH,T.BLACK (Ref # 55047A)	55047-0362-388	1
WASHER,10X22X3 (Ref # 92022)	92022-1365	2
PLUG (Ref # 92066)	92066-0769	2
COLLAR (Ref # 92152)	92152-0784	21
COLLAR,10.5X16X47 (Ref # 92152A)	92152-1800	4
BOLT,FLANGED,10X75 (Ref # 92153)	92153-1384	2
BOLT,FLANGED,12X45 (Ref # 92154)	92154-1420	4
SCREW,TAPPING,6X16 (Ref # 92172)	92172-0739	21
NUT,LOCK,FLANGED,10MM (Ref # 92210)	92210-0276	6
NUT,12MM (Ref # 92210A)	92210-0603	8

© 2026 Kawasaki Motors Corp., U.S.A.