2018 MULE PRO-FXT™ EPS CAMO

PARTS DIAGRAM

Cables

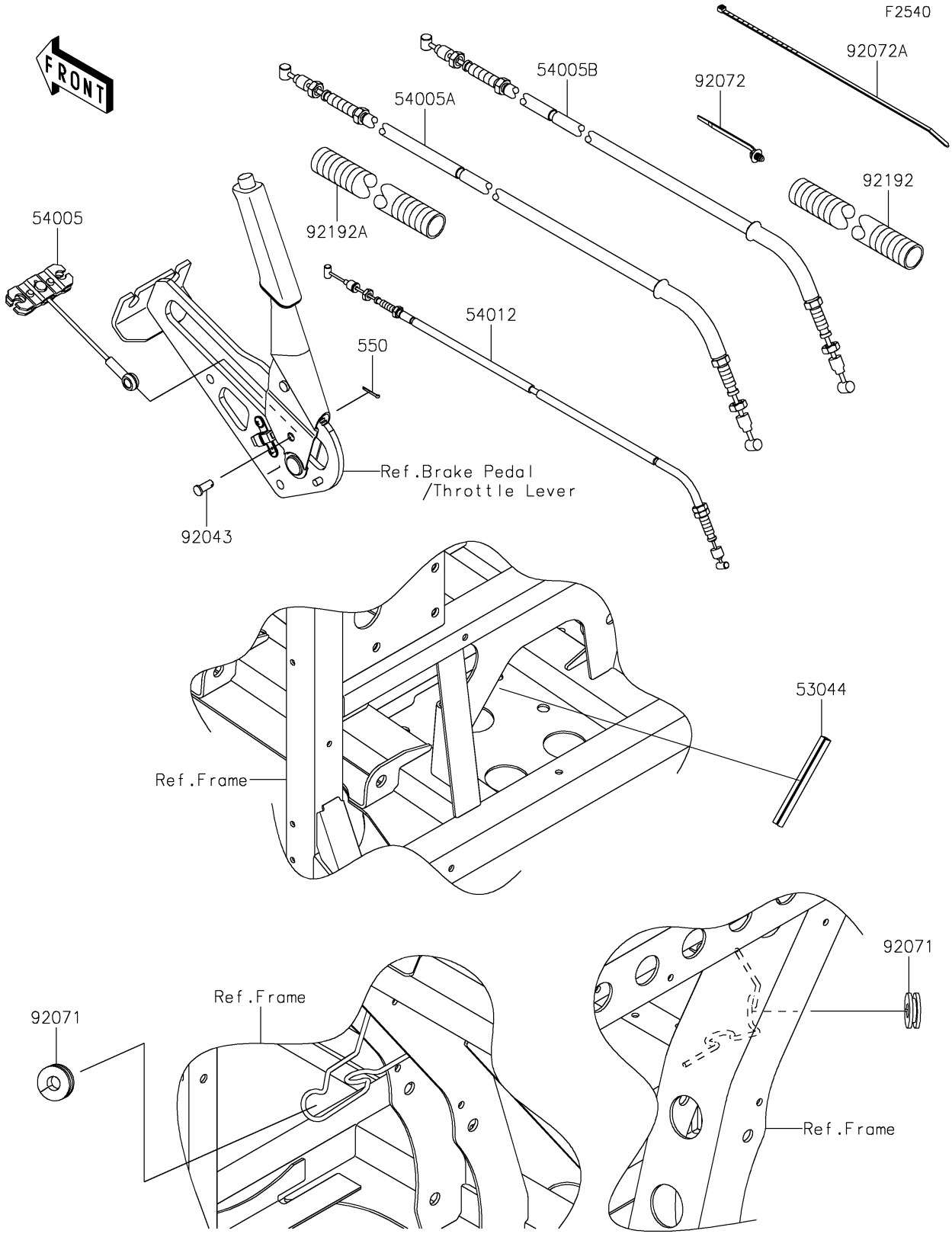

© 2026 Kawasaki Motors Corp., U.S.A.

2018 MULE PRO-FXT™ EPS CAMO

PARTS LIST

Cables

ITEM NAME	PART NUMBER	QUANTITY
TRIM,L=111 (Ref # 53044)	53044-7502	1
CABLE-BRAKE,PARKING,FR (Ref # 54005)	54005-0035	1
CABLE-BRAKE,PARKING,LH (Ref # 54005A)	54005-0039	1
CABLE-BRAKE,PARKING,RH (Ref # 54005B)	54005-0040	1
CABLE-THROTTLE (Ref # 54012)	54012-0639	1
PIN-COTTER,2.5X18 (Ref # 550)	550AA2518	1
PIN (Ref # 92043)	92043-1039	1
GROMMET (Ref # 92071)	92071-0029	2
BAND,OS170-FT7(BLACK) (Ref # 92072)	92072-1414	9
BAND,L=292.1 (Ref # 92072A)	92072-3509	6
TUBE,CONVOLUTED,25.1X30X260 (Ref # 92192)	92192-1363	1
TUBE,CONVOLUTED,25.1X30X210 (Ref # 92192A)	92192-1391	1

© 2026 Kawasaki Motors Corp., U.S.A.