2018 MULE PRO-FXT™ EPS CAMO

PARTS DIAGRAM

Carrier(s)

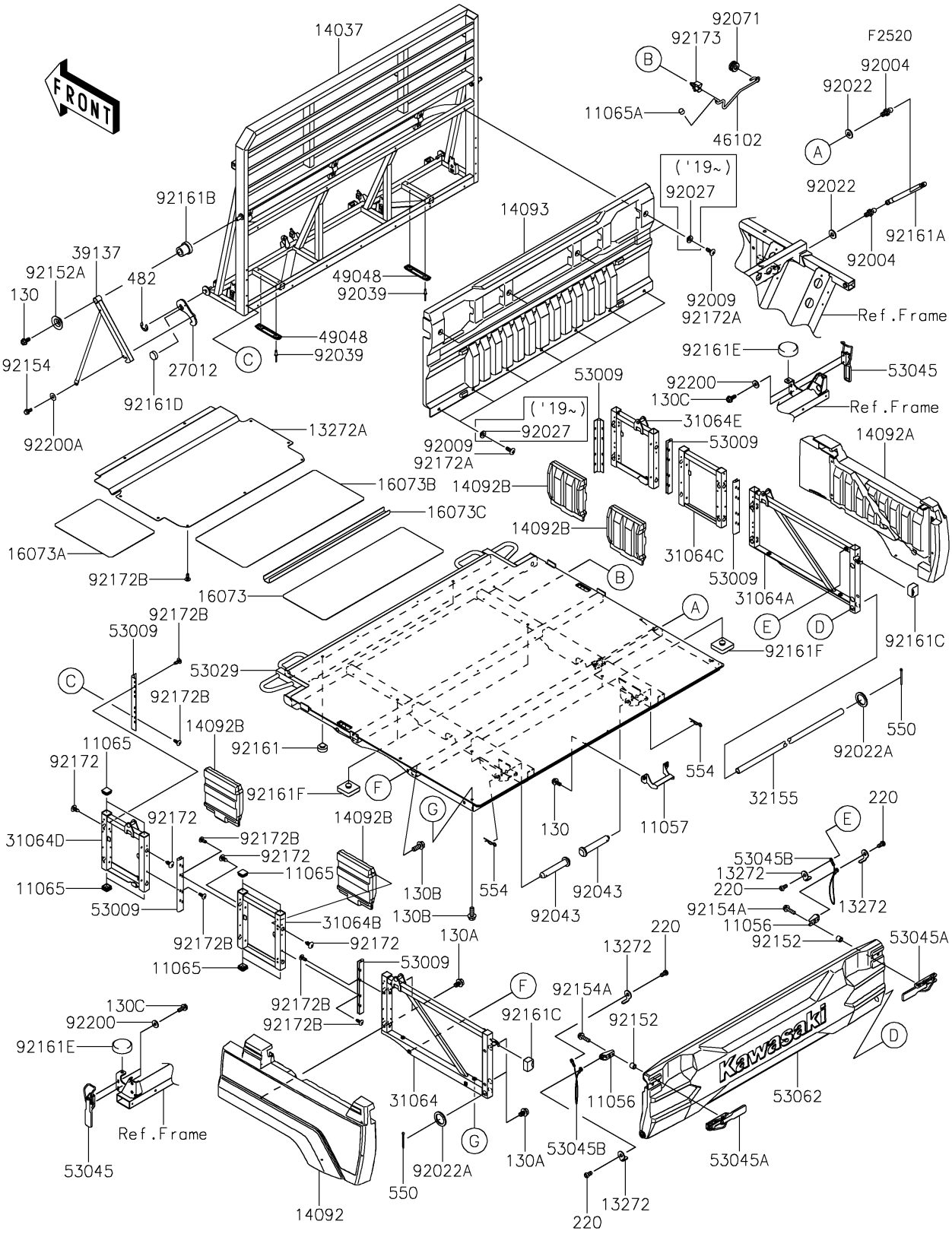

© 2026 Kawasaki Motors Corp., U.S.A.

2018 MULE PRO-FXT™ EPS CAMO

PARTS LIST

Carrier(s)

ITEM NAME	PART NUMBER	QUANTITY
BRACKET,STOPPER (Ref # 11056)	11056-2848	2
BRACKET,GATE SUPPORT (Ref # 11057)	11057-1438	1
CAP (Ref # 11065)	11065-0848	16
CAP (Ref # 11065A)	11065-7504	1
PLATE (Ref # 13272)	13272-1597	4
PLATE (Ref # 13272A)	13272-1694	1
SCREEN (Ref # 14037)	14037-0787	1
COVER,SIDE PANEL,RR,LH,F.BLACK (Ref # 14092)	14092-1179-6Z	1
COVER,SIDE PANEL,RR,RH,F.BLACK (Ref # 14092A)	14092-1180-6Z	1
COVER,SIDE PANEL,L&R (Ref # 14092B)	14092-1181	4
COVER,SCREEN (Ref # 14093)	14093-0301	1
INSULATOR,250X705 (Ref # 16073)	16073-0812	1
INSULATOR,265X335 (Ref # 16073A)	16073-0813	1
INSULATOR,295X705 (Ref # 16073B)	16073-0816	1
INSULATOR,70X705 (Ref # 16073C)	16073-0817	1
HOOK,SCREEN (Ref # 27012)	27012-0787	2
PIPE-COMP,RR,LH (Ref # 31064)	31064-0634	1
PIPE-COMP,RR,RH (Ref # 31064A)	31064-0635	1
PIPE-COMP,MIDDLE,LH (Ref # 31064B)	31064-0638	1
PIPE-COMP,MIDDLE,RH (Ref # 31064C)	31064-0639	1
PIPE-COMP,FR,LH (Ref # 31064D)	31064-0640	1
PIPE-COMP,FR,RH (Ref # 31064E)	31064-0641	1
PIPE (Ref # 32155)	32155-1533	1
STAY-COMP (Ref # 39137)	39137-0661	2
ROD (Ref # 46102)	46102-0606	1
SHOE,SCREEN (Ref # 49048)	49048-0005	2
HINGE (Ref # 53009)	53009-0031	6
CARRIER,BASE (Ref # 53029)	53029-0348	1
HOOK-ASSY,MAIN LOCK (Ref # 53045)	53045-0025	2

© 2026 Kawasaki Motors Corp., U.S.A.

2018 MULE PRO-FXT™ EPS CAMO

PARTS LIST

Carrier(s)

ITEM NAME	PART NUMBER	QUANTITY
HOOK-ASSY,MAIN CLAMP (Ref # 53045A)	53045-0026	2
HOOK-ASSY (Ref # 53045B)	53045-0029	2
GATE-TAIL (Ref # 53062)	53062-0022	1
STUD (Ref # 92004)	92004-0733	2
WASHER,8.2X19X2 (Ref # 92022)	92022-1533	2
WASHER,23X32X2.3 (Ref # 92022A)	92022-1618	2
RIVET,3.2X8 (Ref # 92039)	92039-3763	4
PIN,12.4X72.4 (Ref # 92043)	92043-0716	2
GROMMET,7.5X14X11 (Ref # 92071)	92071-0763	1
BOLT-FLANGED,6X14 (Ref # 130)	130BA0614	4
BOLT-FLANGED,8X12 (Ref # 130A)	130BA0812	8
BOLT-FLANGED,8X20 (Ref # 130B)	130BA0820	8
BOLT-FLANGED,6X16 (Ref # 130C)	130CA0616	4
SCREW-PAN-CROS,6X10 (Ref # 220)	220AB0610	4
CIRCLIP-TYPE-E,10MM (Ref # 482)	482EA0100	2
PIN-COTTER,3.0X30 (Ref # 550)	550AA3030	2
PIN-SNAP,12MM (Ref # 554)	554DA1200	2
COLLAR,6.8X10X9.3 (Ref # 92152)	92152-1799	4
COLLAR (Ref # 92152A)	92152-2128	2
BOLT,FLANGED,5X4.5 (Ref # 92154)	92154-0974	2
BOLT,FLANGED,6X22 (Ref # 92154A)	92154-1356	4
DAMPER (Ref # 92161)	92161-0590	2
DAMPER (Ref # 92161A)	92161-1615	1
DAMPER,12.5X20X24 (Ref # 92161B)	92161-1634	2
DAMPER (Ref # 92161C)	92161-1656	2
DAMPER,17X6 (Ref # 92161D)	92161-1708	2
DAMPER,10X40X10 (Ref # 92161E)	92161-1775	2
DAMPER,10X34X10 (Ref # 92161F)	92161-1920	4
SCREW,6X16 (Ref # 92172)	92172-0284	16

© 2026 Kawasaki Motors Corp., U.S.A.

2018 MULE PRO-FXT™ EPS CAMO

PARTS LIST

Carrier(s)

ITEM NAME	PART NUMBER	QUANTITY
SCREW,6X16 (Ref # 92172A)	92172-0711	11
SCREW,TAPPING,6X16 (Ref # 92172B)	92172-0739	57
CLAMP,FUEL PIPE (Ref # 92173)	92173-1213	1
WASHER,6.5X16X2.0 (Ref # 92200)	92200-1543	4
WASHER,6.5X16X0.5 (Ref # 92200A)	92200-1769	2

© 2026 Kawasaki Motors Corp., U.S.A.