2018 MULE PRO-FXT™ EPS CAMO

PARTS DIAGRAM

Fuel Tank(DJF/DKF)

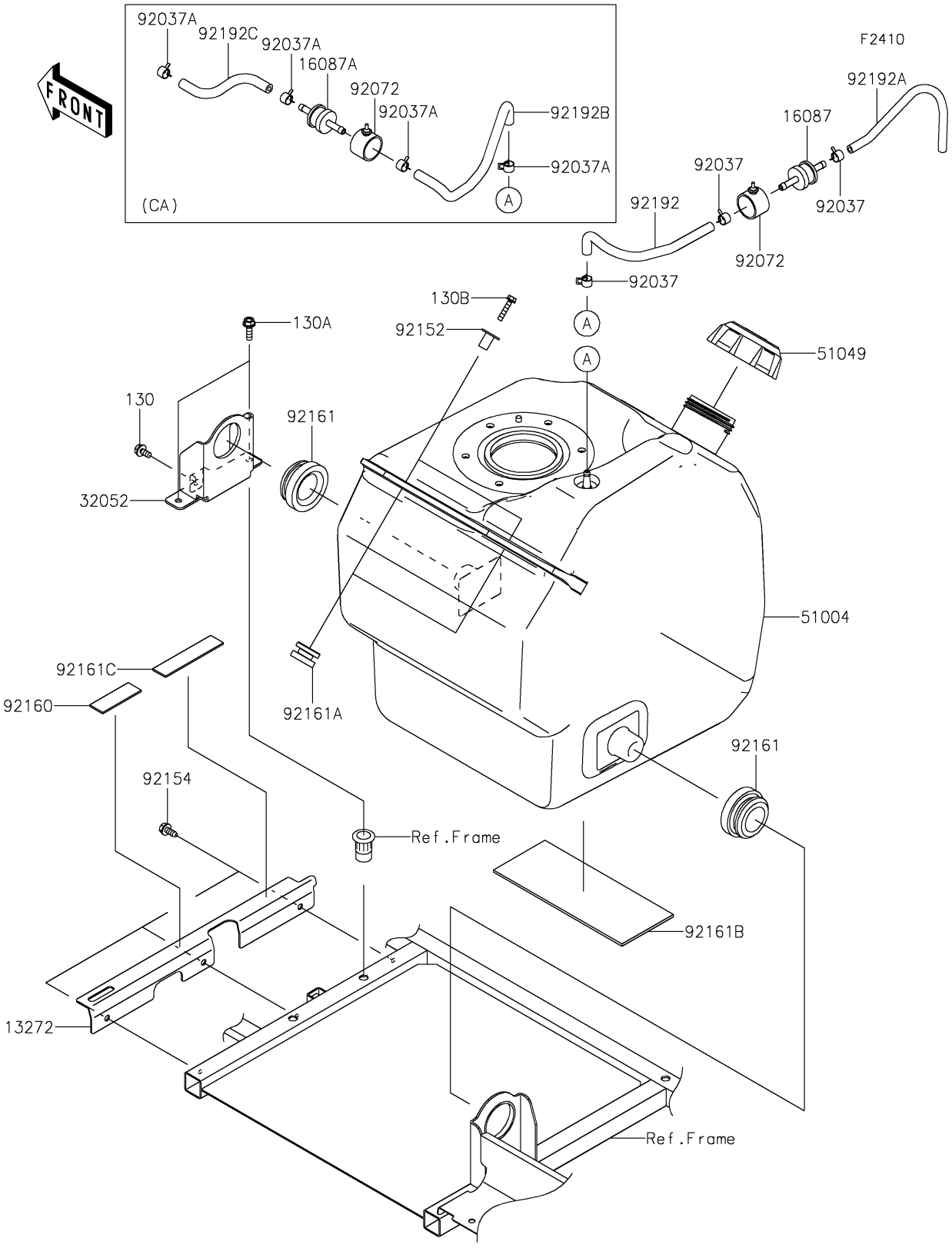

© 2026 Kawasaki Motors Corp., U.S.A.

2018 MULE PRO-FXT™ EPS CAMO

PARTS LIST

Fuel Tank(DJF/DKF)

ITEM NAME	PART NUMBER	QUANTITY
BOLT-FLANGED,6X12 (Ref # 130)	130BA0612	1
BOLT-FLANGED,6X20 (Ref # 130A)	130BA0620	2
BOLT-FLANGED,6X30 (Ref # 130B)	130BA0630	2
PLATE (Ref # 13272)	13272-2206	1
VALVE-CHECK (Ref # 16087)	16087-0008	1
VALVE-CHECK (Ref # 16087A)	16087-0009	1
BRACKET-TANK (Ref # 32052)	32052-0751	1
TANK-FUEL (Ref # 51004)	51004-0018	1
CAP-TANK,FUEL (Ref # 51049)	51049-0718	1
CLAMP,TUBE (Ref # 92037)	92037-1461	3
CLAMP (Ref # 92037A)	92037-2113	4
BAND (Ref # 92072)	92072-0850	1
COLLAR,6.8X10X18.1 (Ref # 92152)	92152-1867	2
BOLT,6X15.6 (Ref # 92154)	92154-1250	3
DAMPER (Ref # 92160)	92160-1075	1
DAMPER,30X56X25 (Ref # 92161)	92161-1613	2
DAMPER,10X28X17 (Ref # 92161A)	92161-1614	2
DAMPER,80X200X3.175 (Ref # 92161B)	92161-1645	1
DAMPER (Ref # 92161C)	92161-1876	1
TUBE,BREATHER (Ref # 92192)	92192-0773	1
TUBE,BREATHER,5X9X220 (Ref # 92192A)	92192-1199	1
TUBE,5X10.4X185/35 (Ref # 92192B)	92192-1662	1
TUBE,5X10.4X80 (Ref # 92192C)	92192-1663	1

© 2026 Kawasaki Motors Corp., U.S.A.