# 2018 MULE PRO-FXT™ EPS CAMO

## PARTS DIAGRAM

### Brake Pedal/Throttle Lever

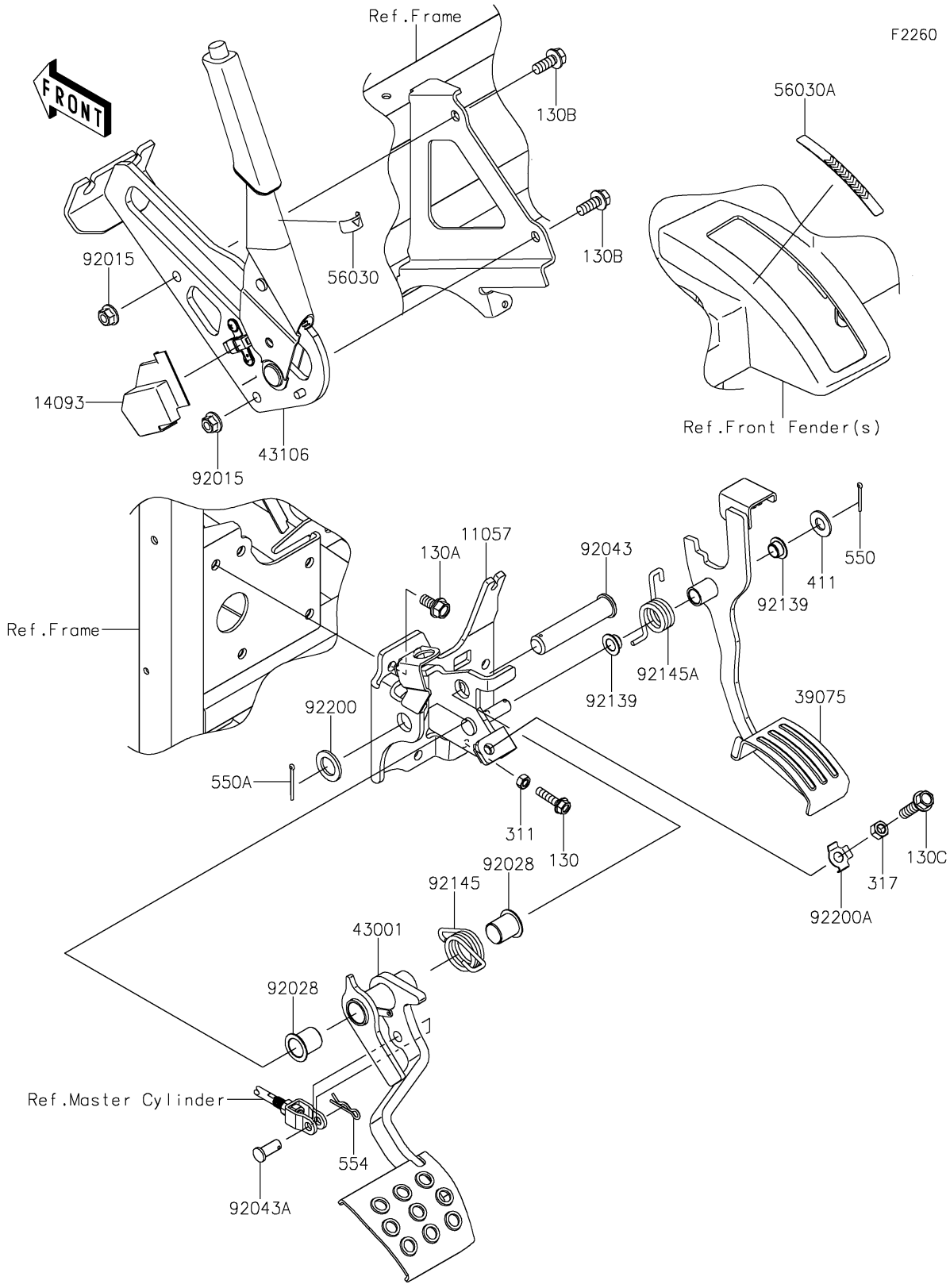


© 2026 Kawasaki Motors Corp., U.S.A.

# 2018 MULE PRO-FXT™ EPS CAMO

## PARTS LIST

### Brake Pedal/Throttle Lever

| ITEM NAME | PART NUMBER | QUANTITY |
|---|---|---|
| BRACKET,PARKING BRAKE (Ref # 11057) | 11057-0727 | 1 |
| BOLT-FLANGED,6X25 (Ref # 130) | 130BA0625 | 1 |
| BOLT-FLANGED,8X18 (Ref # 130A) | 130BA0818 | 5 |
| BOLT-FLANGED,8X20 (Ref # 130B) | 130BA0820 | 2 |
| BOLT-FLANGED,8X30 (Ref # 130C) | 130BA0830 | 1 |
| COVER,PARKING BRAKE SW. (Ref # 14093) | 14093-0241 | 1 |
| NUT-HEX,6MM (Ref # 311) | 311BA0600 | 1 |
| NUT-HEX-SMALL,8MM (Ref # 317) | 317BA0800 | 1 |
| LEVER-THROTTLE (Ref # 39075) | 39075-0023 | 1 |
| WASHER-PLAIN,10MM (Ref # 411) | 411AA1000 | 1 |
| LEVER-BRAKE,FOOT (Ref # 43001) | 43001-0752 | 1 |
| LEVER-ASSY-PARKING BRAKE (Ref # 43106) | 43106-0006 | 1 |
| PIN-COTTER,2.5X18 (Ref # 550) | 550AA2518 | 1 |
| PIN-COTTER,2.5X25 (Ref # 550A) | 550AA2525 | 1 |
| PIN-SNAP,10MM (Ref # 554) | 554DA1000 | 1 |
| LABEL,ARROW (Ref # 56030) | 56030-0905 | 1 |
| LABEL,STROKE RANGE (Ref # 56030A) | 56030-0930 | 1 |
| NUT,FLANGED,8MM (Ref # 92015) | 92015-1406 | 2 |
| BUSHING (Ref # 92028) | 92028-1571 | 2 |
| PIN,16X78 (Ref # 92043) | 92043-0917 | 1 |
| PIN (Ref # 92043A) | 92043-1039 | 1 |
| BUSHING (Ref # 92139) | 92139-0230 | 2 |
| SPRING,BRAKE PEDAL RETURN (Ref # 92145) | 92145-1615 | 1 |
| SPRING,22X3.5 (Ref # 92145A) | 92145-1767 | 1 |
| WASHER,16X26X2.3 (Ref # 92200) | 92200-0043 | 1 |
| WASHER,8.5X17X0.8 (Ref # 92200A) | 92200-0993 | 1 |

© 2026 Kawasaki Motors Corp., U.S.A.