2018 MULE PRO-FXT™ EPS CAMO

PARTS DIAGRAM

Fuel Evaporative System(DJF/DKF)(CA)

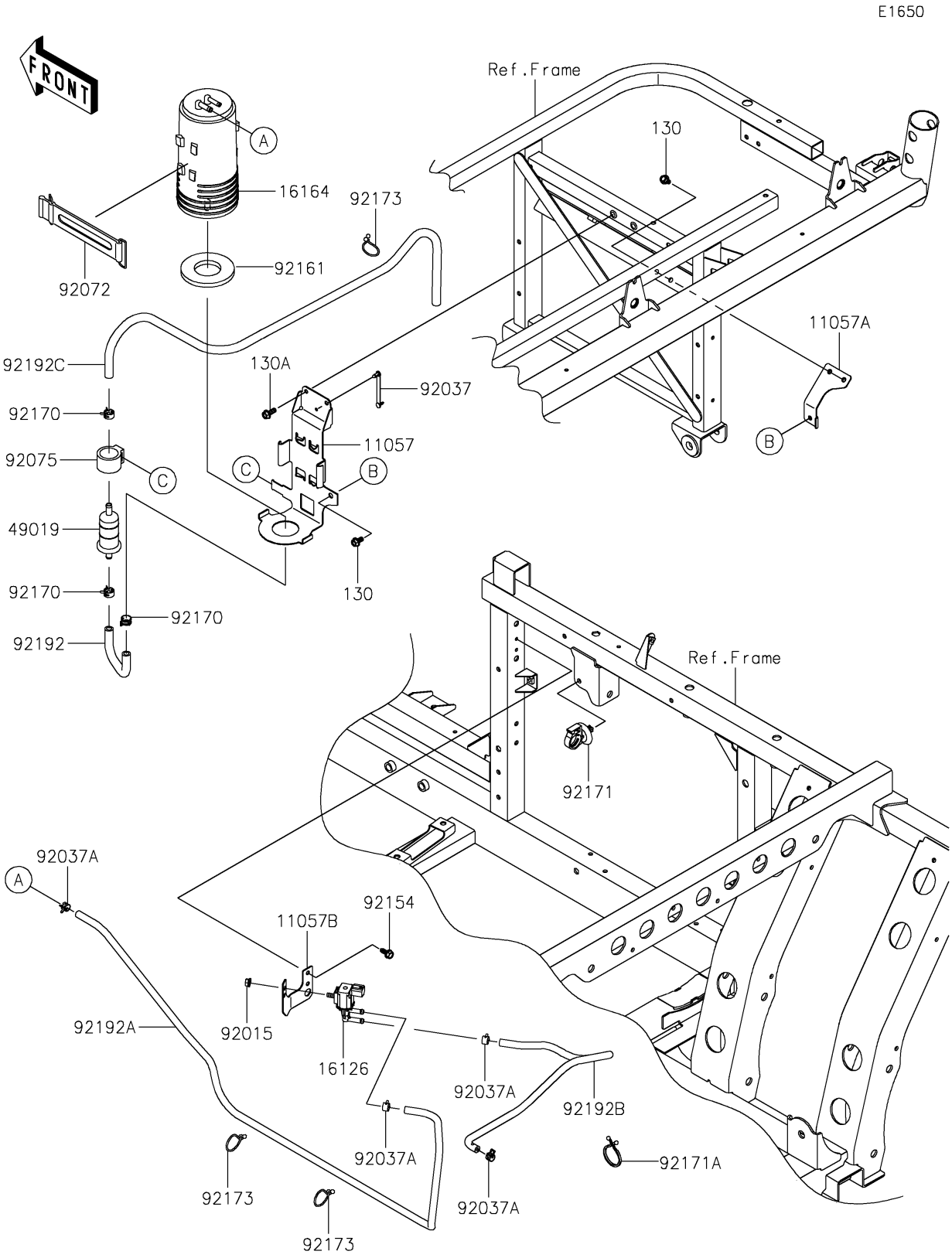

© 2026 Kawasaki Motors Corp., U.S.A.

2018 MULE PRO-FXT™ EPS CAMO

PARTS LIST

Fuel Evaporative System(DJF/DKF)(CA)

ITEM NAME	PART NUMBER	QUANTITY
BRACKET,CANISTER (Ref # 11057)	11057-0023	1
BRACKET (Ref # 11057A)	11057-0024	1
BRACKET,VALVE (Ref # 11057B)	11057-0763	1
VALVE,SOLENOID (Ref # 16126)	16126-0705	1
CANISTER (Ref # 16164)	16164-0016	1
FILTER-FUEL (Ref # 49019)	49019-0032	1
NUT,FLANGED,6MM (Ref # 92015)	92015-1367	1
CLAMP,SPEED,L=58 (Ref # 92037)	92037-1163	1
CLAMP (Ref # 92037A)	92037-2113	4
BAND,L=168 (Ref # 92072)	92072-1306	1
DAMPER,FUEL FILTER (Ref # 92075)	92075-1853	1
BOLT,6X15.6 (Ref # 92154)	92154-1250	2
DAMPER (Ref # 92161)	92161-1843	1
CLAMP (Ref # 92170)	92170-2082	3
CLAMP (Ref # 92171)	92171-0453	1
CLAMP (Ref # 92171A)	92171-0876	1
CLAMP (Ref # 92173)	92173-0848	3
TUBE,FILTER-CANISTER (Ref # 92192)	92192-1665	1
TUBE,CANISTER-VALVE (Ref # 92192A)	92192-1666	1
TUBE,VALVE-INTAKE MANIFOLD (Ref # 92192B)	92192-1667	1
BOLT-FLANGED,6X12 (Ref # 130)	130BA0612	3
BOLT-FLANGED,6X16 (Ref # 130A)	130BA0616	2
TUBE,AIR-FUEL FILTER (Ref # 92192C)	92192-1900	1

© 2026 Kawasaki Motors Corp., U.S.A.