# 2018 MULE PRO-FXT™ EPS CAMO

## PARTS DIAGRAM

### Air Cleaner

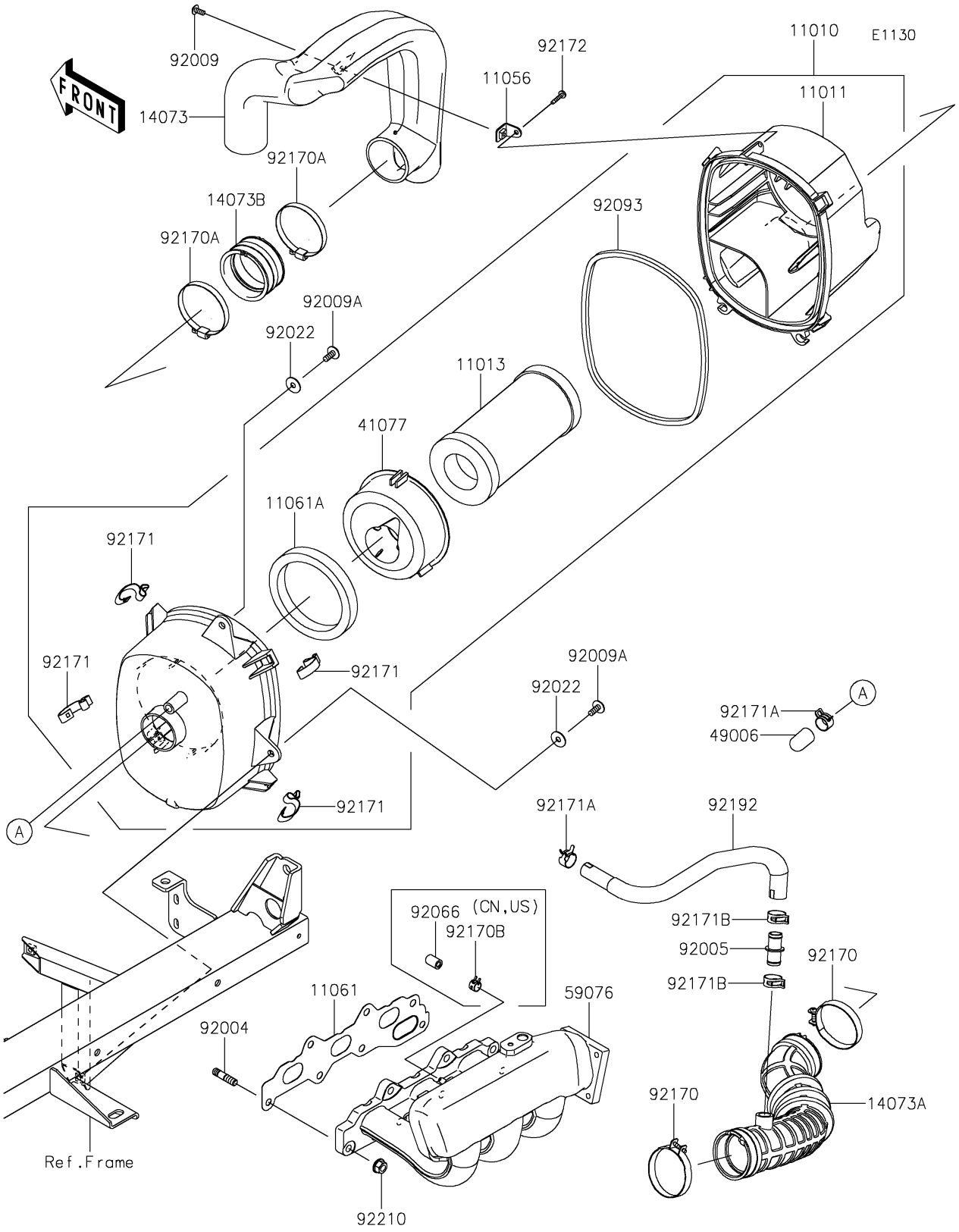


© 2026 Kawasaki Motors Corp., U.S.A.

# 2018 MULE PRO-FXT™ EPS CAMO

## PARTS LIST

### Air Cleaner

| ITEM NAME | PART NUMBER | QUANTITY |
|---|---|---|
| FILTER-ASSY-AIR (Ref # 11010) | 11010-0860 | 1 |
| CASE-AIR FILTER,UPP (Ref # 11011) | 11011-0857 | 1 |
| ELEMENT-AIR FILTER (Ref # 11013) | 11013-1290 | 1 |
| BRACKET,AIR FILTER (Ref # 11056) | 11056-3734 | 1 |
| GASKET,INTAKE MANIFOLD (Ref # 11061) | 11061-0956 | 1 |
| GASKET,ADAPTER (Ref # 11061A) | 11061-0961 | 1 |
| DUCT,INTAKE (Ref # 14073) | 14073-0786 | 1 |
| DUCT,INTAKE (Ref # 14073A) | 14073-0992 | 1 |
| DUCT,JOINT (Ref # 14073B) | 14073-1775 | 1 |
| ADAPTER,ELEMENT (Ref # 41077) | 41077-0719 | 1 |
| BOOT (Ref # 49006) | 49006-0555 | 1 |
| MANIFOLD-INTAKE (Ref # 59076) | 59076-0017 | 1 |
| STUD (Ref # 92004) | 92004-0734 | 7 |
| FITTING,DUCT-BREATHER TUBE (Ref # 92005) | 92005-0992 | 1 |
| SCREW,5X12 (Ref # 92009) | 92009-1154 | 1 |
| SCREW,6X16 (Ref # 92009A) | 92009-1621 | 2 |
| WASHER,PLAIN,6.5X20X1 (Ref # 92022) | 92022-165 | 2 |
| PLUG (Ref # 92066) | 92066-0862 | 1 |
| SEAL,AIR FILTER (Ref # 92093) | 92093-0607 | 1 |
| CLAMP (Ref # 92170) | 92170-1448 | 2 |
| CLAMP (Ref # 92170A) | 92170-1764 | 2 |
| CLAMP (Ref # 92170B) | 92170-2043 | 1 |
| CLAMP (Ref # 92171) | 92171-0225 | 4 |
| CLAMP (Ref # 92171A) | 92171-0533 | 2 |
| CLAMP,18.8MM (Ref # 92171B) | 92171-2056 | 2 |
| SCREW,TAPPING,5X20 (Ref # 92172) | 92172-0009 | 1 |
| TUBE,BREATHER (Ref # 92192) | 92192-2365 | 1 |
| NUT (Ref # 92210) | 92210-0944 | 7 |

© 2026 Kawasaki Motors Corp., U.S.A.