2020 MULE PRO-FXT™ EPS LE

PARTS DIAGRAM

Water Pump

E3031

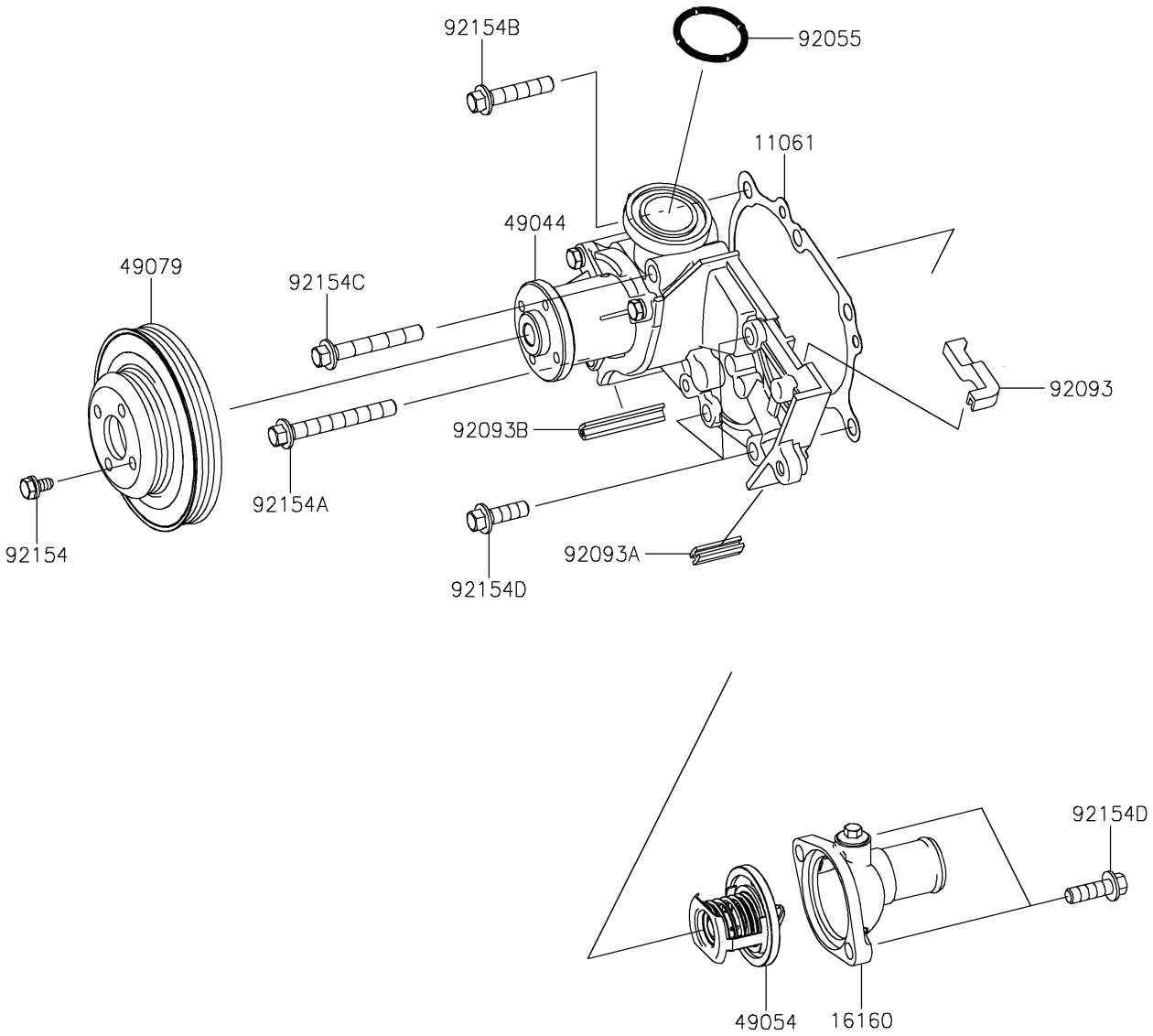

© 2026 Kawasaki Motors Corp., U.S.A.

2020 MULE PRO-FXT™ EPS LE

PARTS LIST

Water Pump

ITEM NAME	PART NUMBER	QUANTITY
GASKET,WATER PUMP (Ref # 11061)	11061-0955	1
BODY,THERMOSTAT HOUSING (Ref # 16160)	16160-0744	1
PUMP-WATER (Ref # 49044)	49044-0014	1
THERMOSTAT (Ref # 49054)	49054-0007	1
PULLEY-BELT (Ref # 49079)	49079-0022	1
RING-O (Ref # 92055)	92055-0825	1
SEAL (Ref # 92093)	92093-0638	1
SEAL (Ref # 92093A)	92093-0639	1
SEAL (Ref # 92093B)	92093-0640	1
BOLT,6X12 (Ref # 92154)	92154-1598	4
BOLT,FLANGED,8X65 (Ref # 92154A)	92154-1599	1
BOLT,FLANGED,8X40 (Ref # 92154B)	92154-1600	1
BOLT,FLANGED,8X55 (Ref # 92154C)	92154-1601	1
BOLT,FLANGED,8X25 (Ref # 92154D)	92154-1602	5

© 2026 Kawasaki Motors Corp., U.S.A.