2018 MULE PRO-FXT™ EPS

PARTS DIAGRAM

Starter Motor

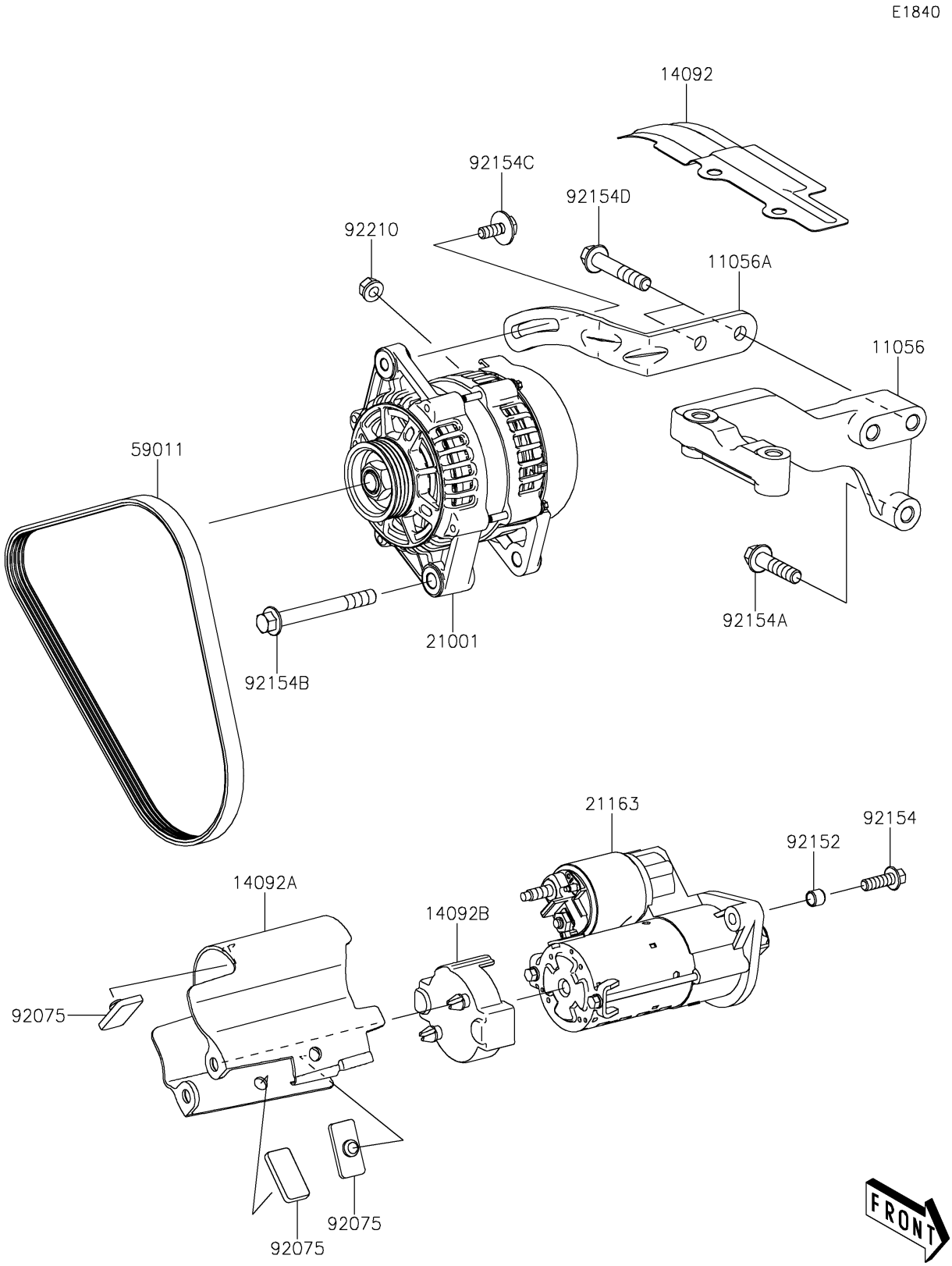

© 2026 Kawasaki Motors Corp., U.S.A.

2018 MULE PRO-FXT™ EPS

PARTS LIST

Starter Motor

ITEM NAME	PART NUMBER	QUANTITY
BRACKET,SUSPENSION,RR (Ref # 11056)	11056-7083	1
BRACKET (Ref # 11056A)	11056-7084	1
COVER,ALTER BELT (Ref # 14092)	14092-1198	1
COVER,STARTER BODY (Ref # 14092A)	14092-1199	1
COVER,STARTER END FACE (Ref # 14092B)	14092-1200	1
GENERATOR (Ref # 21001)	21001-0606	1
STARTER-ELECTRIC (Ref # 21163)	21163-0751	1
BELT (Ref # 59011)	59011-0041	1
DAMPER (Ref # 92075)	92075-1054	3
COLLAR (Ref # 92152)	92152-1961	2
BOLT,FLANGED,8X25 (Ref # 92154)	92154-1602	2
BOLT,FLANGED,10X40 (Ref # 92154A)	92154-1604	1
BOLT,FLANGED,10X90 (Ref # 92154B)	92154-1605	1
BOLT,8X20 (Ref # 92154C)	92154-1606	1
BOLT,FLANGED,10X55 (Ref # 92154D)	92154-1607	2
NUT,6MM (Ref # 92210)	92210-0960	1

© 2026 Kawasaki Motors Corp., U.S.A.