2018 MULE PRO-FXT™ EPS

PARTS DIAGRAM

Air Cleaner

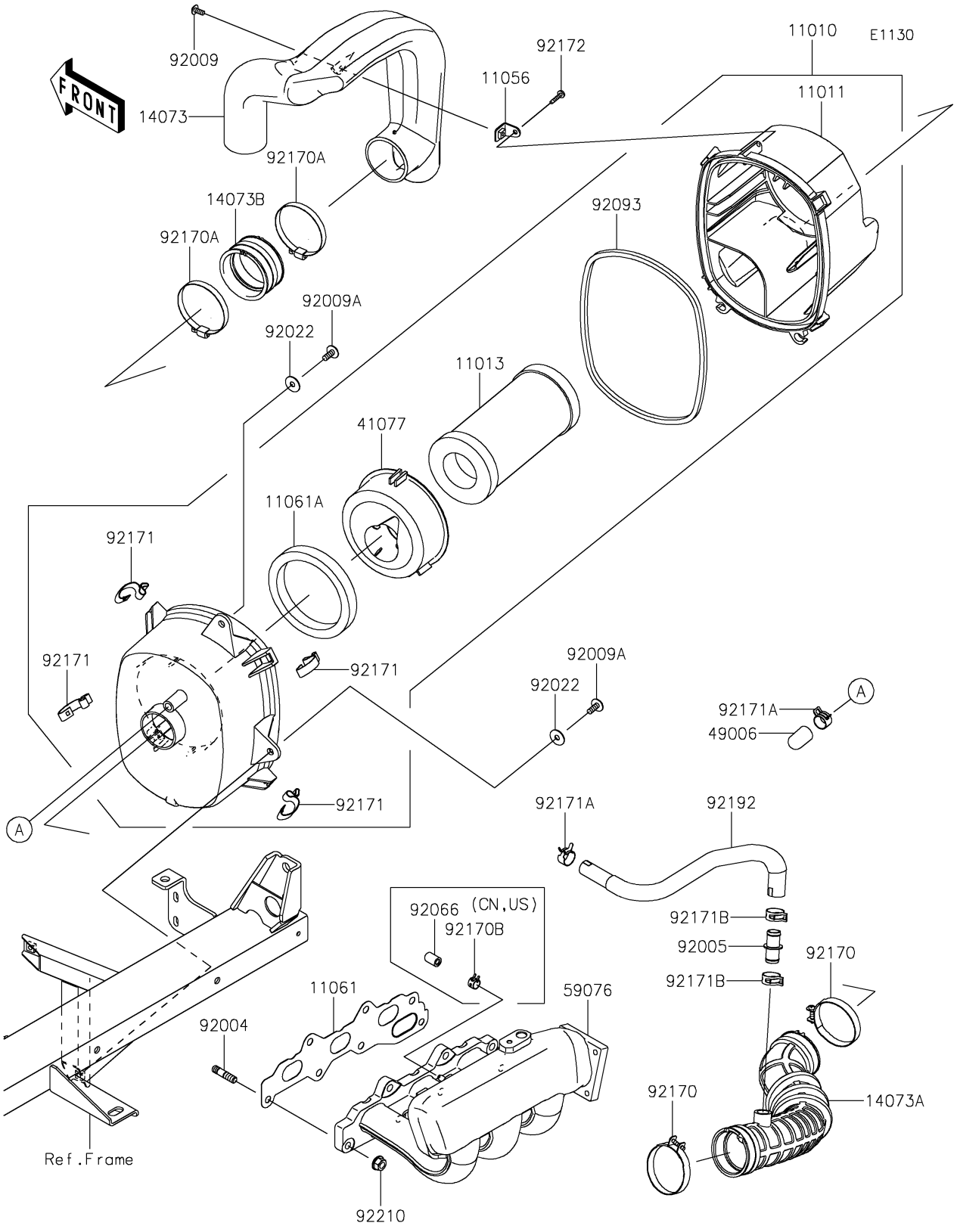

© 2026 Kawasaki Motors Corp., U.S.A.

2018 MULE PRO-FXT™ EPS

PARTS LIST

Air Cleaner

ITEM NAME	PART NUMBER	QUANTITY
FILTER-ASSY-AIR (Ref # 11010)	11010-0860	1
CASE-AIR FILTER,UPP (Ref # 11011)	11011-0857	1
ELEMENT-AIR FILTER (Ref # 11013)	11013-1290	1
BRACKET,AIR FILTER (Ref # 11056)	11056-3734	1
GASKET,INTAKE MANIFOLD (Ref # 11061)	11061-0956	1
GASKET,ADAPTER (Ref # 11061A)	11061-0961	1
DUCT,INTAKE (Ref # 14073)	14073-0786	1
DUCT,INTAKE (Ref # 14073A)	14073-0992	1
DUCT,JOINT (Ref # 14073B)	14073-1775	1
ADAPTER,ELEMENT (Ref # 41077)	41077-0719	1
BOOT (Ref # 49006)	49006-0555	1
MANIFOLD-INTAKE (Ref # 59076)	59076-0017	1
STUD (Ref # 92004)	92004-0734	7
FITTING,DUCT-BREATHER TUBE (Ref # 92005)	92005-0992	1
SCREW,5X12 (Ref # 92009)	92009-1154	1
SCREW,6X16 (Ref # 92009A)	92009-1621	2
WASHER,PLAIN,6.5X20X1 (Ref # 92022)	92022-165	2
PLUG (Ref # 92066)	92066-0862	1
SEAL,AIR FILTER (Ref # 92093)	92093-0607	1
CLAMP (Ref # 92170)	92170-1448	2
CLAMP (Ref # 92170A)	92170-1764	2
CLAMP (Ref # 92170B)	92170-2043	1
CLAMP (Ref # 92171)	92171-0225	4
CLAMP (Ref # 92171A)	92171-0533	2
CLAMP,18.8MM (Ref # 92171B)	92171-2056	2
SCREW,TAPPING,5X20 (Ref # 92172)	92172-0009	1
TUBE,BREATHER (Ref # 92192)	92192-2365	1
NUT (Ref # 92210)	92210-0944	7

© 2026 Kawasaki Motors Corp., U.S.A.