2020 MULE PRO-FXT™

PARTS DIAGRAM

Front Box

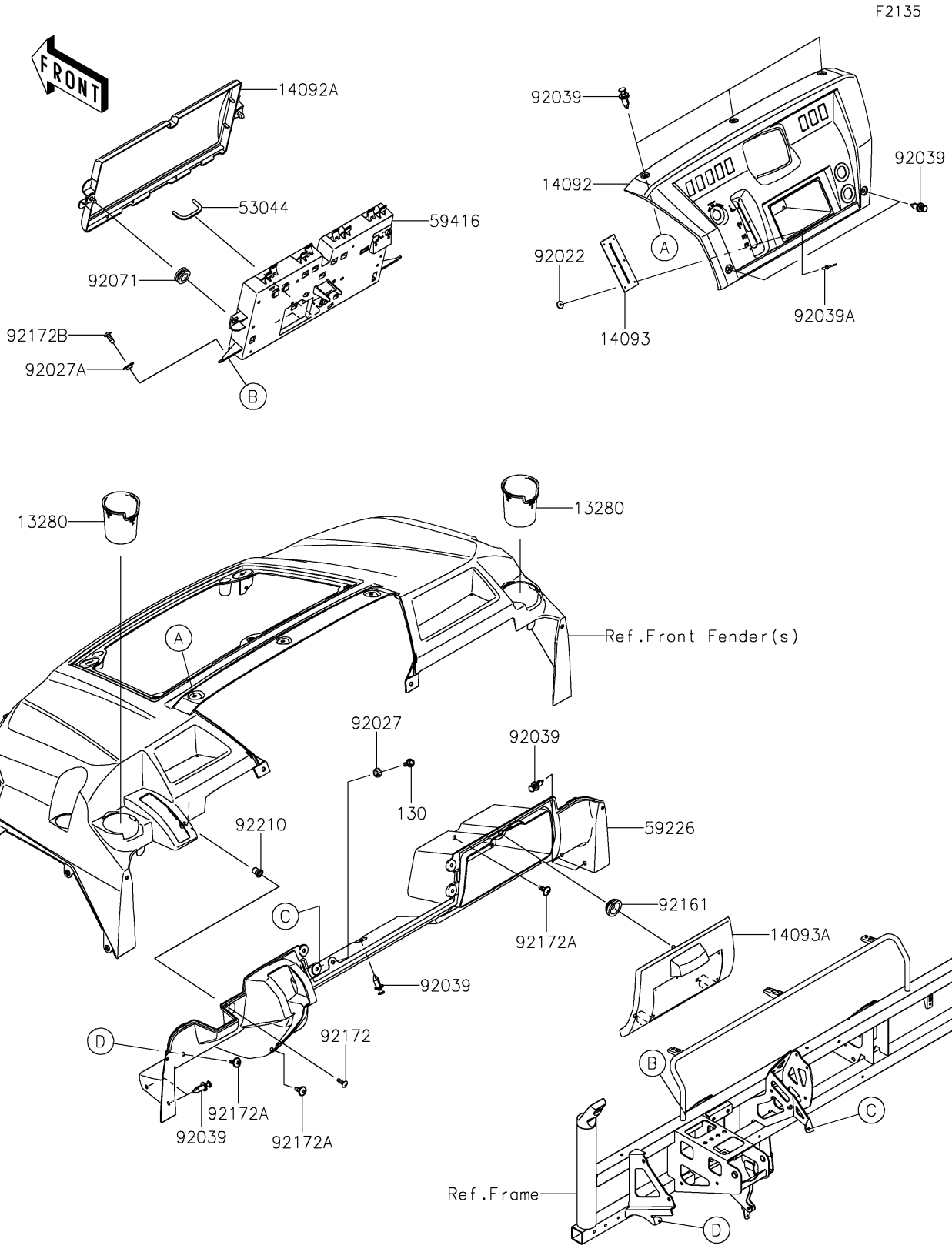

© 2026 Kawasaki Motors Corp., U.S.A.

2020 MULE PRO-FXT™

PARTS LIST

Front Box

ITEM NAME	PART NUMBER	QUANTITY
BOLT-FLANGED,6X16 (Ref # 130)	130CA0616	1
HOLDER,CUP (Ref # 13280)	13280-0774	2
COVER,DASHBOARD (Ref # 14092)	14092-1192	1
COVER,ELECTRIC BOX (Ref # 14092A)	14092-1197	1
COVER,SHIFT LEVER (Ref # 14093)	14093-0146	1
COVER,GLOVE BOX (Ref # 14093A)	14093-0611	1
TRIM (Ref # 53044)	53044-0572	1
PANEL-CONTROL (Ref # 59226)	59226-0042	1
CASE-ELECTRIC (Ref # 59416)	59416-0026	1
WASHER,3.3X12X1.2 (Ref # 92022)	92022-1407	6
COLLAR,L=4.6 (Ref # 92027)	92027-1168	1
COLLAR,L=5.1 (Ref # 92027A)	92027-1260	2
RIVET (Ref # 92039)	92039-0776	10
RIVET (Ref # 92039A)	92039-1231	6
GROMMET (Ref # 92071)	92071-1131	2
DAMPER,7.8X30X11 (Ref # 92161)	92161-1953	1
SCREW,5MM (Ref # 92172)	92172-0292	1
SCREW,6X16 (Ref # 92172A)	92172-0711	3
SCREW,TAPPING,6X16 (Ref # 92172B)	92172-0739	2
NUT,WELL,5MM (Ref # 92210)	92210-0370	1

© 2026 Kawasaki Motors Corp., U.S.A.