2019 MULE PRO-DX™ EPS DIESEL

PARTS DIAGRAM

Drive Shaft-Propeller

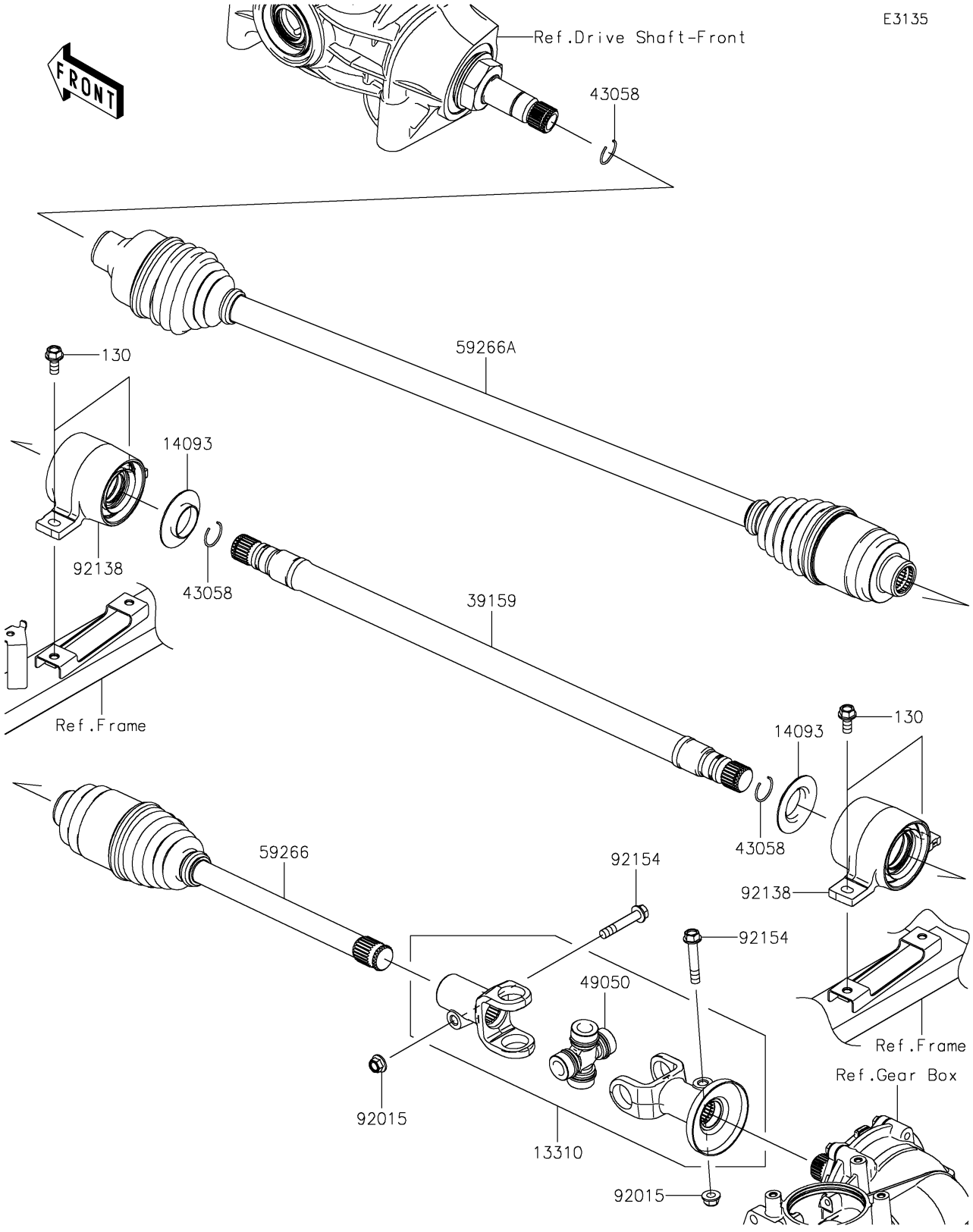

© 2026 Kawasaki Motors Corp., U.S.A.

2019 MULE PRO-DX™ EPS DIESEL

PARTS LIST

Drive Shaft-Propeller

ITEM NAME	PART NUMBER	QUANTITY
BOLT-FLANGED,8X18 (Ref # 130)	130BA0818	4
SHAFT-ASSY (Ref # 13310)	13310-0038	1
COVER,SIDE RIP (Ref # 14093)	14093-0006	2
SHAFT-DRIVE (Ref # 39159)	39159-0045	1
RING (Ref # 43058)	43058-0018	3
SPIDER (Ref # 49050)	49050-0034	1
JOINT-BALL,T/M SIDE (Ref # 59266)	59266-0716	1
JOINT-BALL,FR DIFF SIDE (Ref # 59266A)	59266-0735	1
NUT,8MM (Ref # 92015)	92015-1432	2
BEARING-COMP (Ref # 92138)	92138-0002	2
BOLT,FLANGED,8X46 (Ref # 92154)	92154-1365	2

© 2026 Kawasaki Motors Corp., U.S.A.