2019 MULE PRO-DX™ EPS DIESEL

PARTS DIAGRAM

Crankshaft/Piston(s)

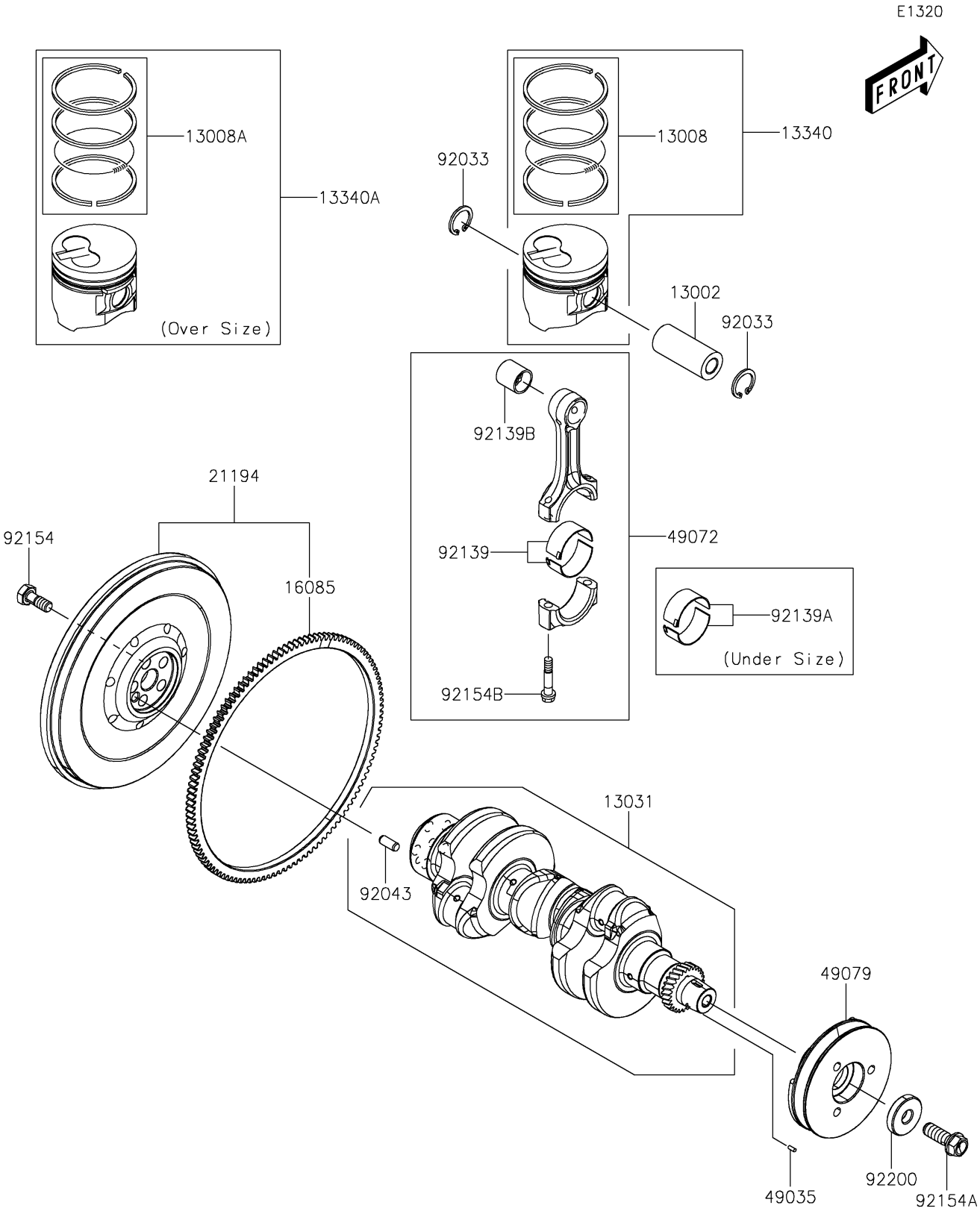

© 2026 Kawasaki Motors Corp., U.S.A.

2019 MULE PRO-DX™ EPS DIESEL

Kawasaki
Let the Good Times Roll®

PARTS LIST

Crankshaft/Piston(s)

ITEM NAME	PART NUMBER	QUANTITY
PIN-PISTON (Ref # 13002)	13002-0047	3
RING-SET-PISTON,STD (Ref # 13008)	13008-0563	3
RING-SET-PISTON,O/S,0.25 (Ref # 13008A)	13008-0566	AR
CRANKSHAFT-COMP (Ref # 13031)	13031-0841	1
PISTON-ASSY-ENGINE,STD (Ref # 13340)	13340-0004	3
PISTON-ASSY-ENGINE,O/S,0.25 (Ref # 13340A)	13340-0005	AR
GEAR,RING (Ref # 16085)	16085-0655	1
FLYWHEEL-COMP (Ref # 21194)	21194-0037	1
PIN-SPRING (Ref # 49035)	49035-0017	1
ROD-COMP-CONNECTING (Ref # 49072)	49072-0001	3
PULLEY-BELT (Ref # 49079)	49079-0026	1
RING-SNAP (Ref # 92033)	92033-0774	6
PIN,8X16 (Ref # 92043)	92043-0886	1
BUSHING,STD (Ref # 92139)	92139-0860	3
BUSHING,U/S,0.25 (Ref # 92139A)	92139-0864	AR
BUSHING,PISTON PIN (Ref # 92139B)	92139-0865	3
BOLT,FLYWHEEL (Ref # 92154)	92154-1992	5
BOLT,FLANGED (Ref # 92154A)	92154-1993	1
BOLT,CONNECTING ROD (Ref # 92154B)	92154-1994	6
WASHER (Ref # 92200)	92200-1807	1

© 2026 Kawasaki Motors Corp., U.S.A.