2019 MULE PRO-DXT™ EPS DIESEL

PARTS DIAGRAM

Door

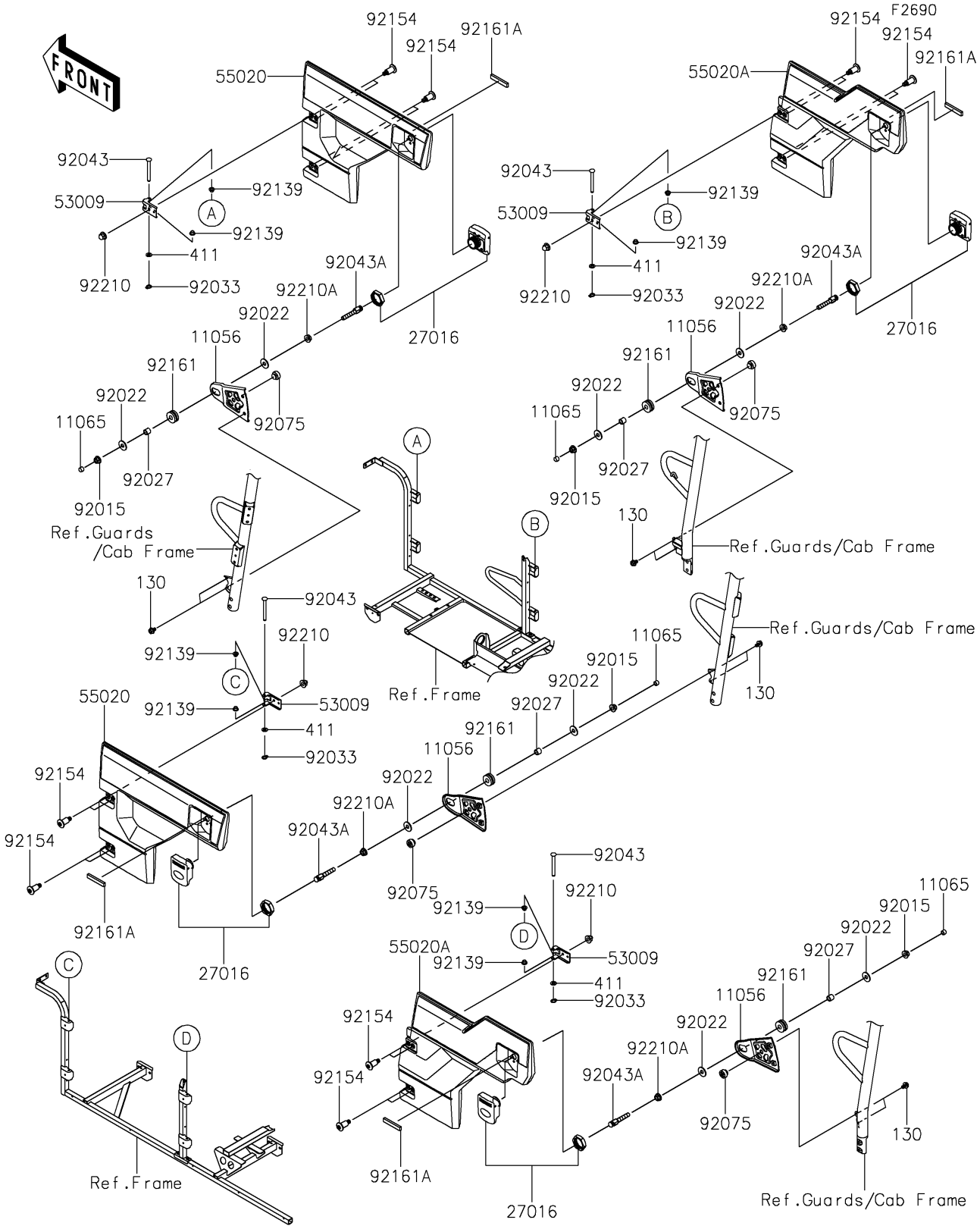

© 2026 Kawasaki Motors Corp., U.S.A.

2019 MULE PRO-DXT™ EPS DIESEL

PARTS LIST

Door

ITEM NAME	PART NUMBER	QUANTITY

© 2026 Kawasaki Motors Corp., U.S.A.