2019 MULE PRO-DXT™ DIESEL

PARTS DIAGRAM

Other(AJF-ALF)

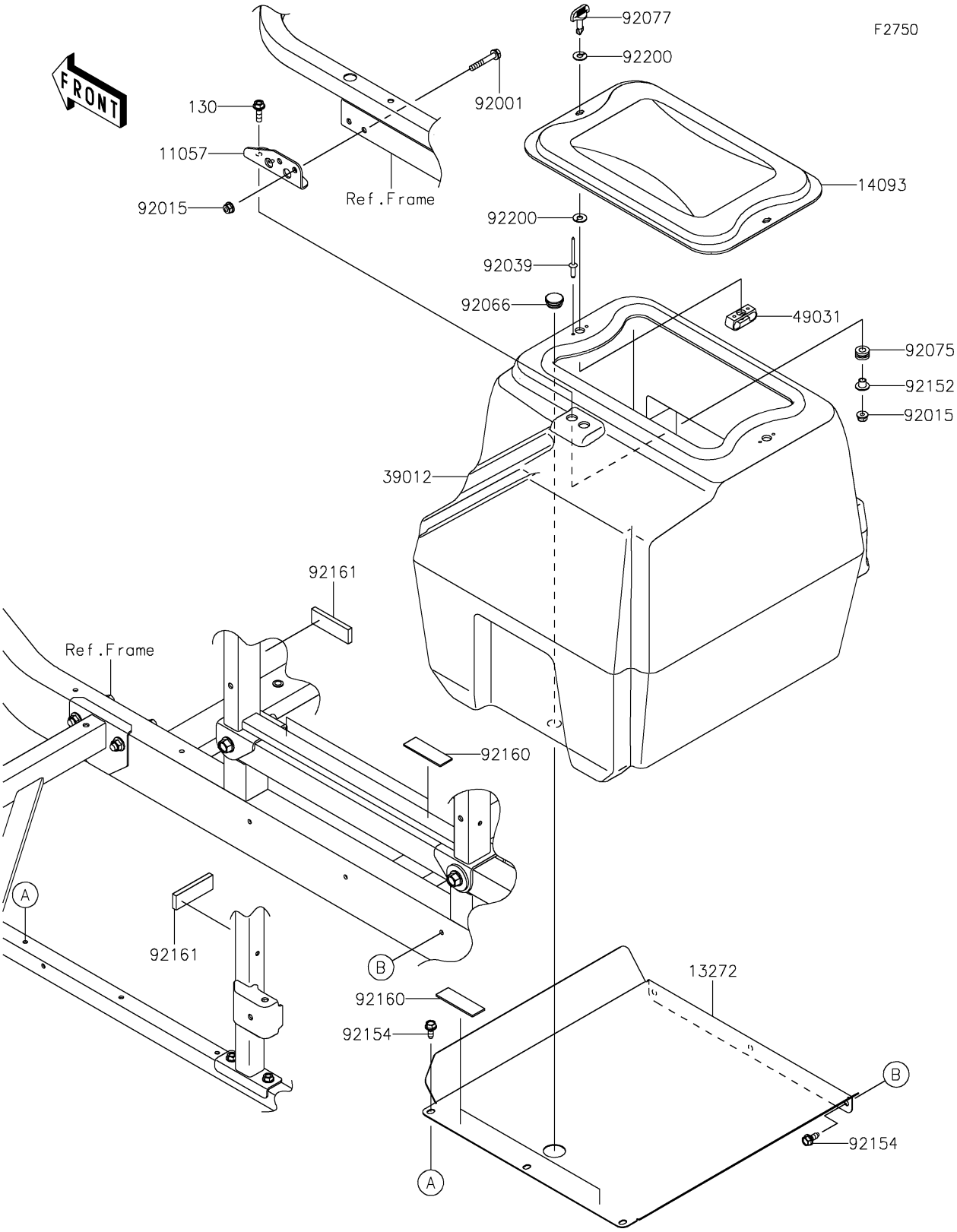

© 2026 Kawasaki Motors Corp., U.S.A.

2019 MULE PRO-DXT™ DIESEL

PARTS LIST

Other(AJF-ALF)

ITEM NAME	PART NUMBER	QUANTITY

© 2026 Kawasaki Motors Corp., U.S.A.