2019 MULE PRO-DXT™ DIESEL

PARTS DIAGRAM

Seat

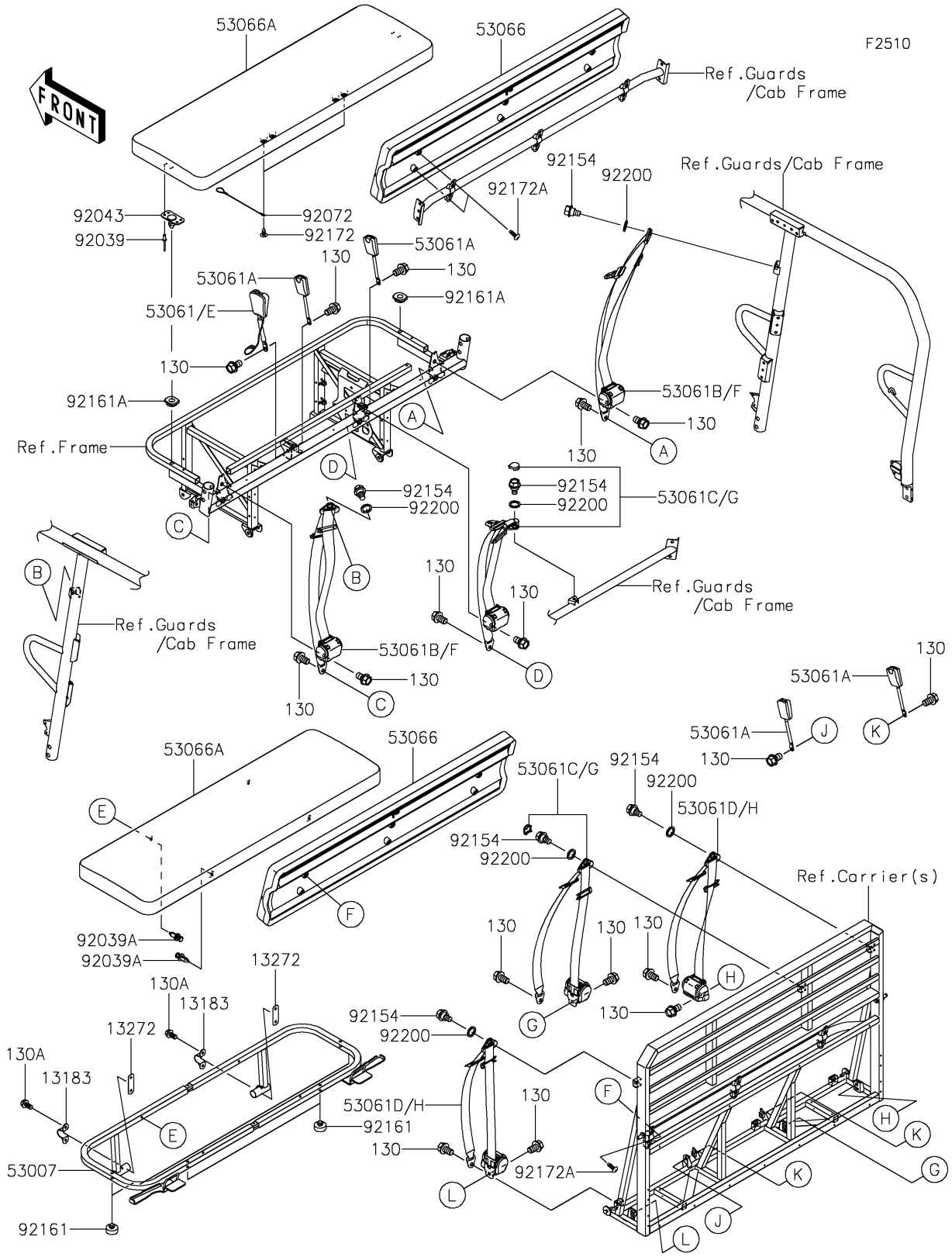

© 2026 Kawasaki Motors Corp., U.S.A.

2019 MULE PRO-DXT™ DIESEL

PARTS LIST

Seat

ITEM NAME	PART NUMBER	QUANTITY
BOLT-FLANGED,12X20 (Ref # 130)	130BA1220	18
BOLT-FLANGED,8X16 (Ref # 130A)	130CA0816	4
PLATE,SEAT (Ref # 13183)	13183-1400	2
PLATE (Ref # 13272)	13272-1699	2
FRAME-SEAT (Ref # 53007)	53007-0364	1
BELT-SEAT,BUCKLE (Ref # 53061A)	53061-0039	5
BELT-SEAT,BUCKLE,SW. (Ref # 53061E)	53061-0338	1
BELT-SEAT,FR,LH&RH (Ref # 53061F)	53061-0340	2
BELT-SEAT,MIDDLE (Ref # 53061G)	53061-0341	2
BELT-SEAT,RR,LH&RH (Ref # 53061H)	53061-0348	2
SEAT-ASSY,BACK,BLACK (Ref # 53066)	53066-0426-MA	2
SEAT-ASSY,BOTTOM,BLACK (Ref # 53066A)	53066-0495-MA	2
RIVET (Ref # 92039)	92039-0747	8
RIVET (Ref # 92039A)	92039-0776	4
PIN (Ref # 92043)	92043-0859	2
BAND (Ref # 92072)	92072-0769	2
BOLT,FLANGED,10X19.5 (Ref # 92154)	92154-1959	6
DAMPER,SEAT (Ref # 92161)	92161-1065	4
DAMPER,10.5X30X8.2 (Ref # 92161A)	92161-1784	2
SCREW,6X16 (Ref # 92172)	92172-0284	2
SCREW,TAPPING,6X20 (Ref # 92172A)	92172-0488	12
WASHER,16X22X2 (Ref # 92200)	92200-1798	6

© 2026 Kawasaki Motors Corp., U.S.A.