2017 MULE PRO-DXT™ DIESEL

PARTS DIAGRAM

Wheels/Tires

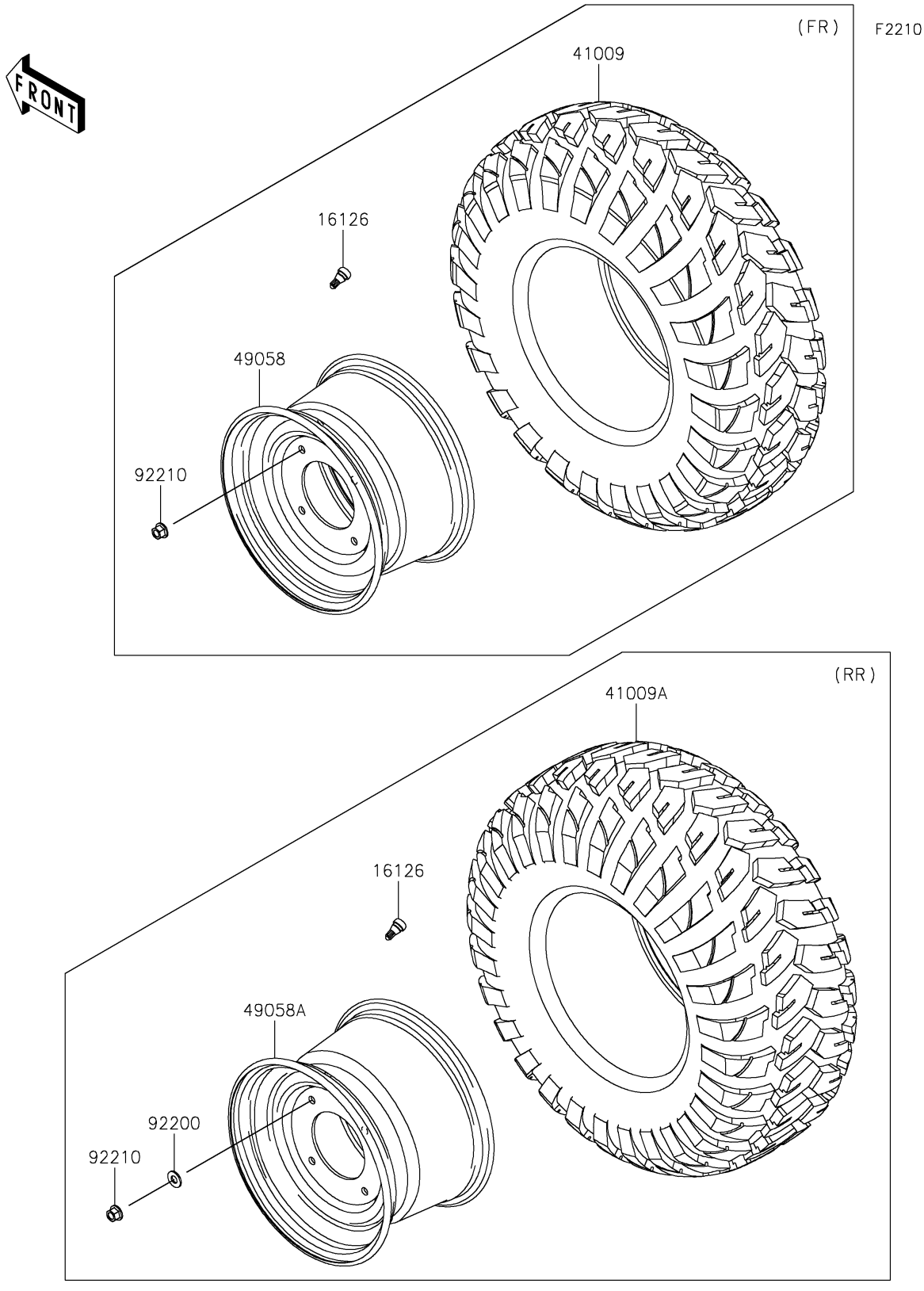

© 2026 Kawasaki Motors Corp., U.S.A.

2017 MULE PRO-DXT™ DIESEL

Kawasaki
Let the Good Times Roll®

PARTS LIST

Wheels/Tires

ITEM NAME	PART NUMBER	QUANTITY

© 2026 Kawasaki Motors Corp., U.S.A.