2019 MULE PRO-DXT™ DIESEL

PARTS DIAGRAM

Front Suspension

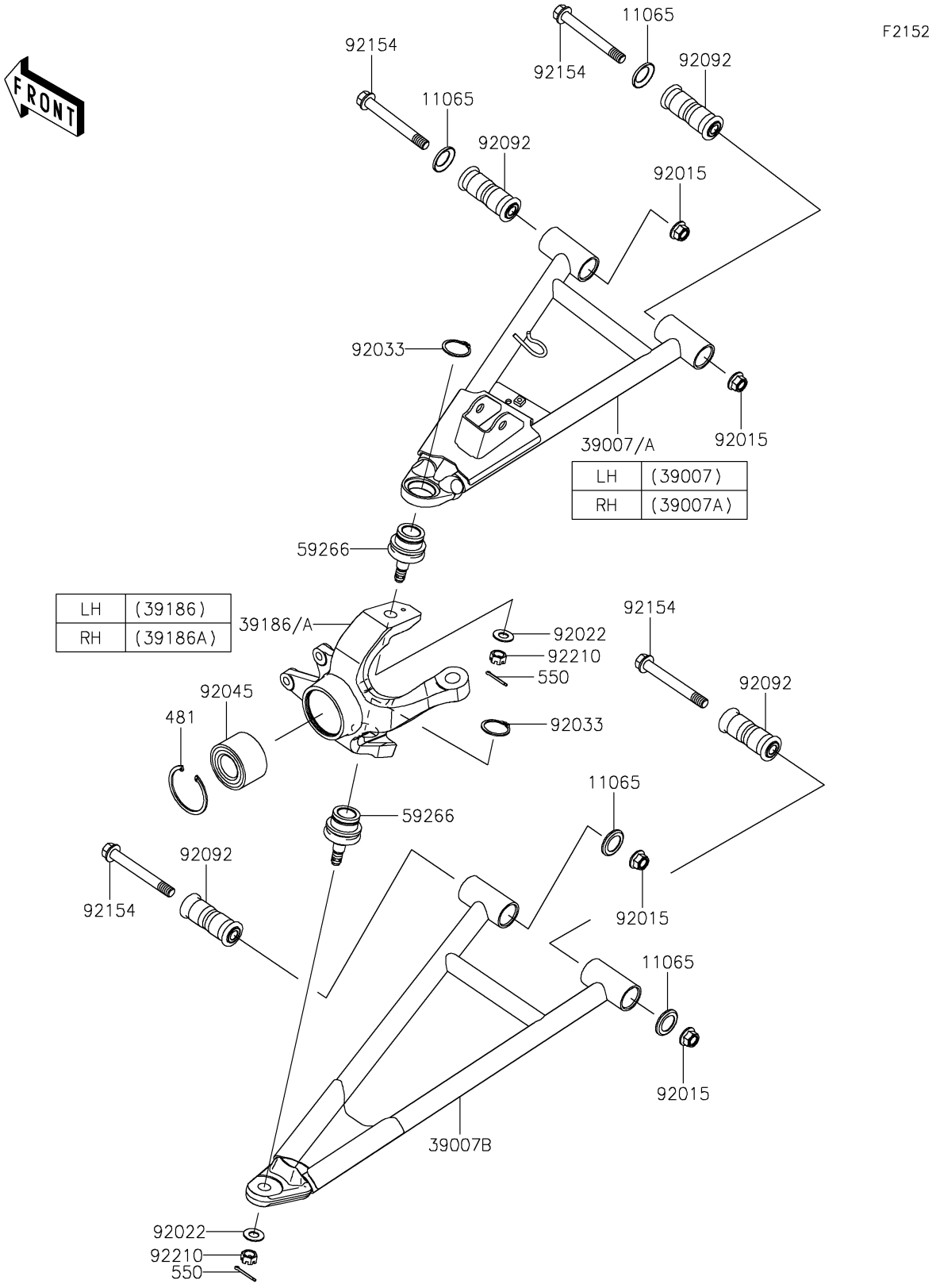

© 2026 Kawasaki Motors Corp., U.S.A.

2019 MULE PRO-DXT™ DIESEL

PARTS LIST

Front Suspension

ITEM NAME	PART NUMBER	QUANTITY
CAP,ARM (Ref # 11065)	11065-0838	8
ARM-SUSP,FR,UPP,LH (Ref # 39007)	39007-0377	1
ARM-SUSP,FR,UPP,RH (Ref # 39007A)	39007-0378	1
ARM-SUSP,FR,LWR,LH&RH (Ref # 39007B)	39007-0383	2
KNUCKLE,FR,LH (Ref # 39186)	39186-0319	1
KNUCKLE,FR,RH (Ref # 39186A)	39186-0320	1
CIRCLIP-TYPE-C (Ref # 481)	481J6000	2
PIN-COTTER,3.0X25 (Ref # 550)	550AA3025	4
JOINT-BALL (Ref # 59266)	59266-0711	4
NUT,LOCK,FLANGED,12MM (Ref # 92015)	92015-1433	8
WASHER (Ref # 92022)	92022-1831	4
RING-SNAP,C-TYPE,32MM (Ref # 92033)	92033-1262	4
BEARING-BALL,30X60X37 (Ref # 92045)	92045-0762	2
BUSHING-RUBBER,12X20X78 (Ref # 92092)	92092-0028	8
BOLT,FLANGED,12X100 (Ref # 92154)	92154-1318	8
NUT,CASTLE,12MM (Ref # 92210)	92210-0395	4

© 2026 Kawasaki Motors Corp., U.S.A.