# 2017 MULE PRO-DXT™ DIESEL

## PARTS DIAGRAM

### Control

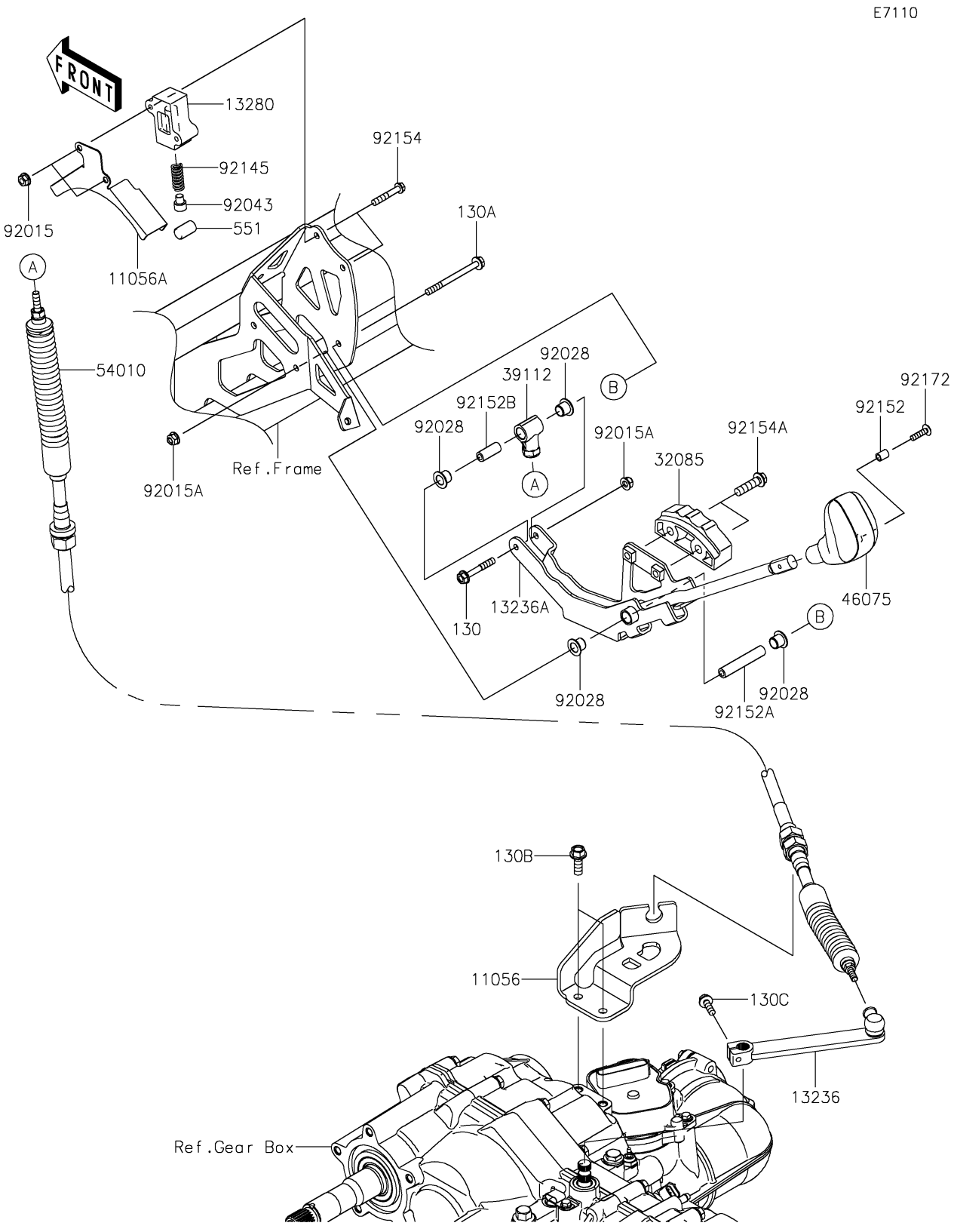


© 2026 Kawasaki Motors Corp., U.S.A.

# 2017 MULE PRO-DXT™ DIESEL

## PARTS LIST

### Control

| ITEM NAME | PART NUMBER | QUANTITY |
|---|---|---|
| BRACKET,T/M SIDE (Ref # 11056) | 11056-2946 | 1 |
| BRACKET,DUST COVER (Ref # 11056A) | 11056-7274 | 1 |
| BOLT-FLANGED,6X40 (Ref # 130) | 130BA0640 | 1 |
| BOLT-FLANGED,6X70 (Ref # 130A) | 130BA0670 | 1 |
| BOLT-FLANGED,8X22 (Ref # 130B) | 130BA0822 | 2 |
| BOLT-FLANGED,6X20 (Ref # 130C) | 130CA0620 | 1 |
| LEVER-COMP,T/M SIDE (Ref # 13236) | 13236-0747 | 1 |
| LEVER-COMP,SHIFT (Ref # 13236A) | 13236-0748 | 1 |
| HOLDER (Ref # 13280) | 13280-0776 | 1 |
| STOPPER (Ref # 32085) | 32085-0748 | 1 |
| RODEND-TIE (Ref # 39112) | 39112-0020 | 1 |
| GRIP (Ref # 46075) | 46075-0569 | 1 |
| CABLE,SHIFT (Ref # 54010) | 54010-0601 | 1 |
| PIN-DOWEL,12X20 (Ref # 551) | 551R1220 | 1 |
| NUT,FLANGED,6MM (Ref # 92015) | 92015-1367 | 2 |
| NUT,LOCK,FLANGED,6MM (Ref # 92015A) | 92015-1675 | 2 |
| BUSHING (Ref # 92028) | 92028-1507 | 4 |
| PIN (Ref # 92043) | 92043-0790 | 1 |
| SPRING (Ref # 92145) | 92145-1578 | 1 |
| COLLAR,5.6X8X10.5 (Ref # 92152) | 92152-1545 | 1 |
| COLLAR,6X10X56.5 (Ref # 92152A) | 92152-1823 | 1 |
| COLLAR,6X10X25 (Ref # 92152B) | 92152-1854 | 1 |
| BOLT,FLANGED,6X35 (Ref # 92154) | 92154-1544 | 2 |
| BOLT,FLANGED,8X30 (Ref # 92154A) | 92154-1907 | 2 |
| SCREW,5X20 (Ref # 92172) | 92172-2081 | 1 |

© 2026 Kawasaki Motors Corp., U.S.A.