# 2017 MULE PRO-DXT™ DIESEL

## PARTS DIAGRAM

### Air Cleaner-Belt Converter

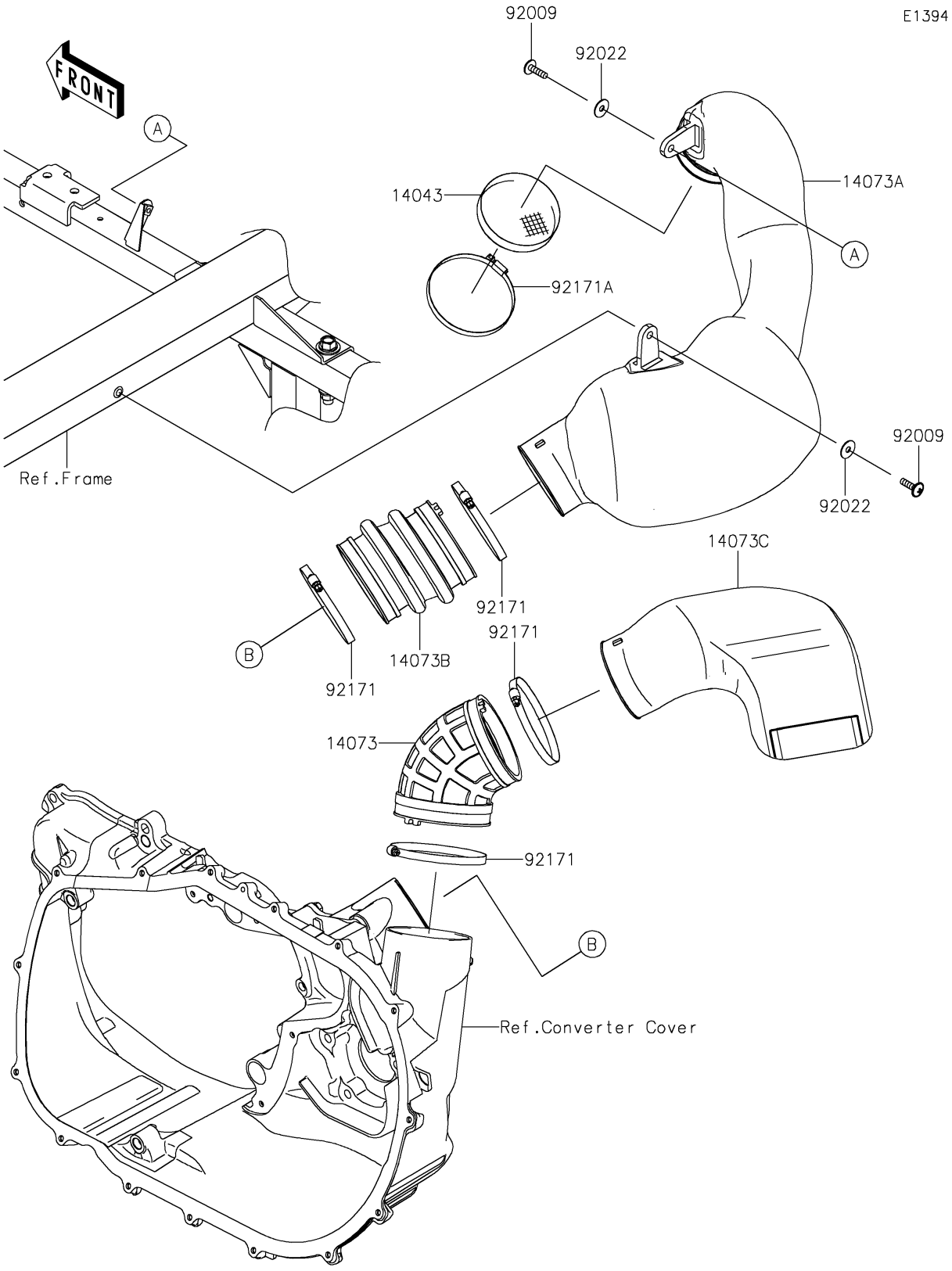


© 2026 Kawasaki Motors Corp., U.S.A.

# 2017 MULE PRO-DXT™ DIESEL

## PARTS LIST

### Air Cleaner-Belt Converter

| ITEM NAME | PART NUMBER | QUANTITY |
|---|---|---|
| FILTER (Ref # 14043) | 14043-0013 | 1 |
| DUCT,EXHAUST (Ref # 14073) | 14073-0788 | 1 |
| DUCT,INTAKE (Ref # 14073A) | 14073-0789 | 1 |
| DUCT,INTAKE (Ref # 14073B) | 14073-0790 | 1 |
| DUCT,EXHAUST (Ref # 14073C) | 14073-0793 | 1 |
| SCREW,6X22 (Ref # 92009) | 92009-1441 | 2 |
| WASHER,PLAIN,6.5X20X1 (Ref # 92022) | 92022-165 | 2 |
| CLAMP (Ref # 92171) | 92171-1383 | 4 |
| CLAMP (Ref # 92171A) | 92171-3716 | 1 |

© 2026 Kawasaki Motors Corp., U.S.A.