2017 MULE PRO-DXT™ DIESEL

PARTS DIAGRAM

Driven Converter/Drive Belt

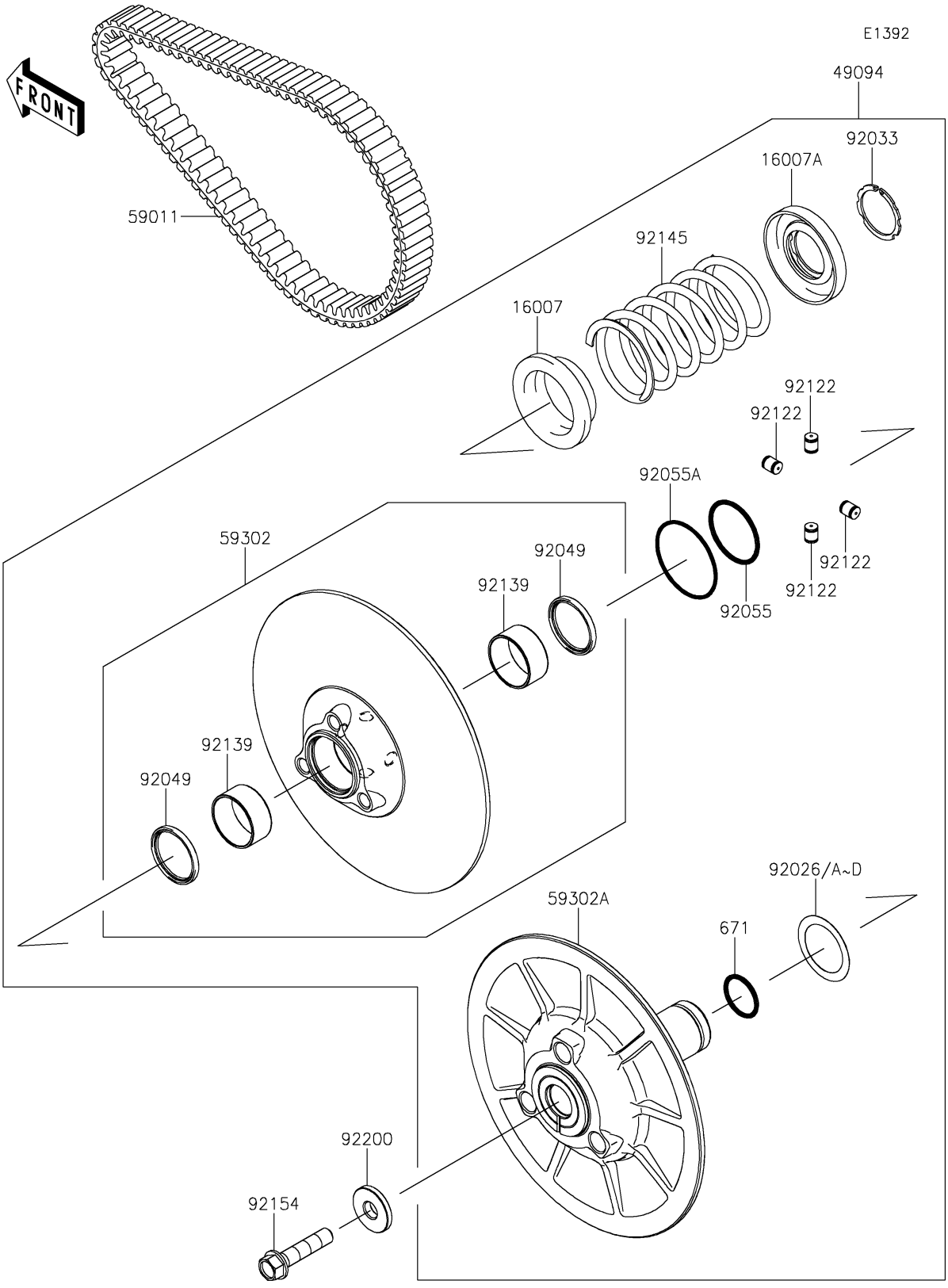

© 2026 Kawasaki Motors Corp., U.S.A.

2017 MULE PRO-DXT™ DIESEL

PARTS LIST

Driven Converter/Drive Belt

ITEM NAME	PART NUMBER	QUANTITY
SEAT-SPRING,MOVABLE (Ref # 16007)	16007-0049	1
SEAT-SPRING,FIXED (Ref # 16007A)	16007-0050	1
CONVERTER-ASSY-DRIVEN (Ref # 49094)	49094-0095	1
BELT,CVT (Ref # 59011)	59011-0037	1
SHEAVE-COMP,MOVABLE (Ref # 59302)	59302-0049	1
SHEAVE-COMP,FIXED (Ref # 59302A)	59302-0095	1
O RING (Ref # 671)	671D2530	1
SPACER,T=0.30 (Ref # 92026)	92026-0034	AR
SPACER,T=1.00 (Ref # 92026A)	92026-1565	AR
SPACER,T=0.60 (Ref # 92026B)	92026-1569	AR
SPACER,T=1.40 (Ref # 92026C)	92026-1570	AR
SPACER,T=0.80 (Ref # 92026D)	92026-1617	AR
RING-SNAP (Ref # 92033)	92033-1317	1
SEAL-OIL (Ref # 92049)	92049-1528	2
RING-O,46.4X3.1 (Ref # 92055)	92055-0752	1
RING-O,59.5X2.4 (Ref # 92055A)	92055-0753	1
ROLLER (Ref # 92122)	92122-0043	4
BUSHING (Ref # 92139)	92139-0313	2
SPRING (Ref # 92145)	92145-1671	1
BOLT,FLANGED,12X55 (Ref # 92154)	92154-1336	1
WASHER (Ref # 92200)	92200-0069	1

© 2026 Kawasaki Motors Corp., U.S.A.